North American Policies and Technologies

ELECTRICITY Transmission & Distribution TODAY

THE ELECTRICITY FORUM

surfing the net?

visit our website
www.electricityforum.com

The Gateway to North America's Electrical Industry

ISSUE 3 Volume 17, 2005

STAYING SAFE IS THE NAME OF THE GAME

PUBLICATION MAIL AGREEMENT # 40051146

Electrical Buyer's Guides, Forums, On-Line Magazines, Industry News, Job Postings, Electrical Store, Industry Links

www.electricityforum.com

CONNECTING ...PROTECTING

OHIO BRASS®
HUBBELL
CHANCE®
ANDERSON™
FARGO®

Ohio Brass Polymer Housed Substation Arresters PVIA (ANSI-Intermediate) and PVNA (ANSI-Station) offer advantages of light-weight and smaller cross-section for applications with size restrictions.

PDV-100 OPTIMA Distribution Class Polymer Surge Arrester

Joining our full line of Polymer Arresters, this new Heavy-Duty Arrester enhances performance and offers you many benefits:

- Improved Isolator Reliability Down to 1 AMP
- ANSI Heavy-Duty Rated
- New Universal Temporary Overvoltage
- Field-tested Sealing System

For further information, visit our website www.HubbellPowerSystems.ca

Hubbell Canada LP, Power Systems
870 Brock Road South
Pickering, ON L1W 1Z8
Phone (905) 839-1138 • Fax: (905) 831-6353
www.HubbellPowerSystems.ca

HUBBELL®

ELECTRICITY TODAY
THE ELECTRICITY FORUM

Volume 17, Issue 3, 2005

Publisher/Executive Editor
Randolph W. Hurst
rwh@istar.ca

Associate Publisher/Advertising Sales
Carol Gardner
carol@electricityforum.com

Editor
Don Horne
don@electricityforum.com

Web Site Advertising Sales
Barbara John
forum@capital.net

Circulation Manager
Colleen Flaherty
colleen@electricityforum.com

Production Manager
Alla Krutous
alla@electricityforum.com

Visit our Web Site:
www.electricityforum.com
E-mail: hq@electricityforum.com

Subscribe on-line:
www.electricityforum.com/et/subscribe.htm

Call us: 905-686-1040
Fax us: 905-686-1078

Electricity Today is published 8 times a year by The Canadian Electricity Forum [a division of The Hurst Communications Group Inc.], the conference management and publishing company for North America's electric power and engineering industry.
Distribution: free of charge to North American electrical industry personnel who fall within our BPA request circulation parameters. Paid subscriptions are available to all others.
Subscription Enquiries: all requests for subscriptions or changes to free subscriptions (i.e. address changes) must be made in writing to:
Subscription Manager, Electricity Today
Suite 204, 15 Harwood Avenue S.,
Ajax, Ontario, L1S 2B9
or on-line at www.electricityforum.com.

Canada Post - Canadian Publications Mail Product Sales Agreement 40051146
ISSN 0843-7343
Printed in Canada.
All rights reserved.
The contents of this publication may not be reproduced in whole or in part without prior permission from the publisher.

Member of:
CCBI BPA

in this issue

INDUSTRY NEWS

6 Areva T&D poised for new growth

8 China awards two contracts to Areva

16 Energy Innovation Network formed to bring people and resources together

17 Niagara Falls Hydro receives business achievement award

28 The growing case for Ontario's peat to fire it's electricity needs

THE HUMAN FACTOR

10 The Sustainable Point: Balancing durability, reliability and cost

TRANSMISSION AND DISTRIBUTION

12 Clean Generators deliver a peaking solution for Long Island

18 Vector Jump relaying an economical solution for distributed generation islanding protection

20 Leading electrical groups saving time, boosting safety with new technology

22 Increasing Power requirements drive modular substation technology

26 Laxiwa: The largest power station on the Yellow River

SAFETY

32 Once burned, twice shy... If you're lucky!

37 Safety guidelines for high voltage and/or line-powered equipment

41 Thermography and ultrasound partner to detect electrical anomalies from outside the box

44 PRODUCTS AND SERVICES SHOWCASE

46 ADVERTISERS INDEX

ELECTRICITY TODAY
THE ELECTRICITY FORUM

BRUCE CAMPBELL

ED DE PALEZIEUX

BOB FESMIRE

CHARLIE MACALUSO

SCOTT ROUSE

BRUCE CAMPBELL, LL.B., Independent Electricity Market Operator (IMO)

Mr. Campbell is responsible for business development, regulatory affairs, corporate relations and communications, and legal affairs at the IMO. He has extensive background within the industry and, in particular, acted as legal counsel in electricity planning, facility approval and rate proceedings throughout his career in private practice.

ED DE PALEZIEUX, Alberta Electric System Operator (AESO)

Mr. de Palezieux is Vice-President of the Customer and Communication Services at AESO. the Alberta Electric System Operator. Under his leadership the team develops and delivers a variety of services, products and business communications for market and transmission system customers. Among the key corporate objectives delivered by the team are: new customer enrollment, transmission system access, corporate communications, customer education and stakeholder relations.

BOB FESMIRE, ABB

Bob Fesmire is a communications manager in ABB's Power Technologies division. He writes regularly on a range of power industry topics including T&D, IT systems, and policy issues. He is based in Santa Clara, California.

CHARLIE MACALUSO, Electricity Distributor's Association

Mr. Macaluso has more than 20 years experience in the electricity industry. As the CEO of the EDA, Mr. Macaluso spearheaded the reform of the EDA to meet the emerging competitive electricity marketplace, and positioned the EDA as the voice of Ontario's local electricity distributors, the publicly and privately owned companies that safely and reliably deliver electricity to over four million Ontario homes, businesses, and public institutions.

SCOTT ROUSE, CIPEC Chairman

Scott Rouse is a strong advocate for proactive energy solutions. He has achieved North American recognition for developing an energy efficiency program that won Canadian and US EPA Climate Protection Awards through practical and proven solutions. As a published author, Scott has been called to be a keynote speaker across the continent for numerous organizations including the ACEEE, IEEE, EPRI, and Combustion Canada. Scott currently serves as Chair of the Canadian Industry Program for Energy Conservation (CIPEC) - Energy Manager Network and is a professional engineer, holds an M.B.A. and is also a Certified Energy Manager.

60th Anniversary

TEREX Utilities

Digger Derrick

1945 - 2005

1945

Developed a mechanical digger to serve the TELephone and ELECTric Utility Markets.

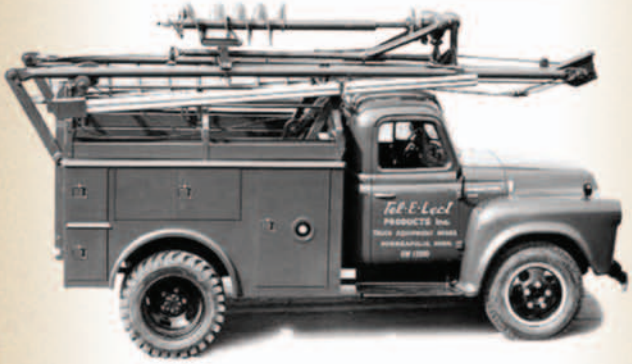

1960's

1960 – Many Innovative Developments
- PG Winch
- Continuous Rotation System
- Rite Way Auger Storage
- Fiberglass Pin on Extension

1962 – Introduced the Telecon (TELelect ECONomy), a force in its time.
- Introduced Dual Cylinders

1964 – Introduced the first of the Commander Units and Box Constructed Booms

TEREX Utilities has long been regarded as a leader in bringing new products, technologies and innovations into the utility market. The TEREX Telelect digger derrick is a prime example. It is with great pride that we are continually introducing new ideas and concepts to our customers and relish the challenge of accepting that role of keeping in front of an ever-changing market.

1970's

1972 – Started Radio Control Division

1976 – Developed the "C" Series Digger Derrick

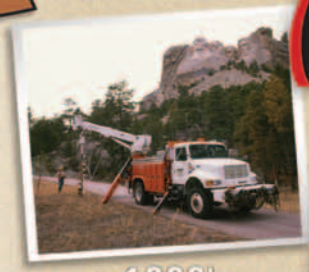

1980's

1985 – Developed the Commander 5000 Series

1986 – Developed the Commander 6000 Series

1989 – Introduced the Telecon II

1989 – Introduced the General
- Introduced Fiber Optic Controls

1990's

1992 – Developed the "92" Series

1992 – Developed the Commander 7000 Series

1995 – Introduced the Commander 4000 Series

1997 – Introduced the latest Generation of Radio Controls

1998 – Develop the L4000 Series

1999 – Introduce the XL4000 Series

2000-Present

2002 – Introduced the Captain 3039 Digger Derrick

2003 – Redesigned the Commander 5000 & Commander 6000 Series
- Introduced the New Generation of the the Telecon Digger Derrick

2004 – Introduced the RC Series Radio Controlled Digger Derrick

TEREX Utilities

600 Oakwood Road,
PO BOX 1150,
Watertown, SD 57201, USA
(605) 882-4000
www.terexutilities.com

AREVA T&D POISED FOR NEW GROWTH

By R.W. Hurst

Refinanced, restructured and repositioned, Areva T&D is poised for new growth in the competitive T&D world marketplace, according to Michel Augonnet, Executive Vice President, Sales, Areva T&D.

In a recent interview with Electricity Today magazine in the company's Paris headquarters, Mr. Augonnet reviewed the steps that Areva T&D has taken (since Alstom sold its T&D division to Areva in January 2004) to strengthen and advance its global position in the T&D market.

Before the sale to Areva, the company's ability to compete effectively in the market was eroded because of Alstom's difficulty investing new money into its T&D business, its products and facilities.

"Now that we are part of the Areva group, all our past financial headaches have vanished. Today, we easily have access to the financial market and bonds. We are seen as being with a shareholder that is committed to the energy industry…It's clear that electric utilities view us now as being part of a group that is committed to their business, and that has been extremely positive," Mr. Augonnet said.

Areva T&D has been focused for the past year on restructuring its sales and service operations, as well as rationalizing some of its less competitive products in an attempt to improve the company's focus in product lines that are more competitive and essential for growth.

"The first challenge for Areva T&D, which has been quite widely communicated to the market, has been to restore profitability equivalent to that of our main competitors," he said.

Following the sale to Areva, management instituted a complete review of Areva T&D's activities in an effort to redesign the company according to 18 different product lines, each being refocused on one aspect of the market, such as high voltage circuit breakers, transformers, disconnectors, primary distribution switchgear, secondary distribution switchgear, etc.

Michel Augonnet

"This gave each product line vice president a complete view of the world market, in terms of their product development. At the same time, we have a complete sales organization now combined with service," he said.

"One thing that has clearly changed under Areva management is the new emphasis on sales and service by combining the two into what we call "proximity centers" whereby customers can interface with all Areva T&D products and services through one sales organization or proximity center," he added.

"Especially in the field of high voltage circuit breakers and power electronics, Areva has already invested quite a lot of resources into these areas and today we are benefiting from that. We still have to do a lot more on the medium voltage side and we are employing much more effort on that side of the business. But it is also true that we have put more focus on sales and that has had a lot to do with the volume this past year," he said.

Already in the past year, Areva T&D has announced a significant amount of new contracts in the Middle East and the Mediterranean ring (north Africa), South America and Canada *(See story in the last issue of* Electricity Today*, "AREVA T&D Inc. wins de-icing contract in Quebec").* There is also a lot of new business for the company's Power Transformer manufacturing facility in Turkey where there is a lot of manufacturing, innovation and expansion.

International Competition

Areva T&D's sales within France are about 10 per cent of the company's total manufacturing output. In fact, the company's base markets (France, Germany, etc) are declining or leveling out while the company is witnessing a high rate of T&D growth in emerging countries such as China and India.

In today's global market, you have to invest where the growth is. Does this mean there will be an investment in manufacturing capacity in those countries where Areva T&D is looking to expand its market reach?

"Absolutely. I would say that our challenge today is because we see our base markets (France, Germany, etc.) declining or leveling out at best, we are seeing a high growth in regions such as Asia and in particular, countries such as India and China. That is clearly our goal today, to develop manufacturing capacity in those countries because our customers want to see our products produced locally as much as possible," he forecasted.

"Secondly, it is also important to manufacture, as much as possible, in the currency in which you sell. And the Euro/US$ imbalance or fluctuations means it is important for us to offset those exchange variations by manufacturing in the monetary zones where you are selling," he added.

And this is why the sale of the T&D business from Alstom to Areva was not without considerable strategy. The position of parent company Areva, which is

Continued on Page 8

Mobility Business Solutions

Now there's a way for inspectors to

SPEND MORE TIME ON SITE

and less time in the office. Our Wireless Data Solutions give them the tools to access up-to-date inventory information and submit reports from almost anywhere.

Bell Wireless Data Specialists are helping utilities inspectors work more efficiently. We're setting them up with solutions like the rugged Symbol® handheld running on our fast, dependable **1X** network. Inspectors can submit data once, from the field, and go directly to the next site instead of going back to the office.

To learn more about how we can help your business, call **1 866 838-4107** or visit **www.businessonthego.ca/utilities**

Bell

Making it simple.™

Certain conditions and restrictions apply. Service, features and functionality available in Bell Mobility coverage areas where technology exists. SYMBOL is a registered trademark of SYMBOL technologies.

Continued from Page 6

already strong in the nuclear generation business in the United States and China, is expected to help Areva T&D better position itself in both these countries. The fact is that Areva, with more than 7,000 employees in the United States is already a leading player in the nuclear industry in the U.S. In addition, Areva T&D's competitive position in China is enhanced by the fact that Areva is extremely well known by the Central Chinese Authority because of its strong presence in nuclear energy.

Traditionally, there have been four major European-based players in the high voltage T&D market: ABB, Siemens, Areva and VA Tech. All four companies together represent about 40 per cent of the world's total market for T&D high voltage equipment sales.

"In actual fact, what was occurring was that ABB was losing market share equally to Siemens and Areva. With the recent announcement this year by Siemens that it intends to acquire VA Tech, this clearly will put Siemens in the number two position.

And in the world T&D marketplace, don't kid yourself — size matters. It has been the stated objective of Areva since its purchase of the T&D operations from Alstom to challenge Siemens for number two position in the marketplace and this won't be possible without "organic growth" through a more competitive emphasis on sales and service as well as "external growth" namely: partnerships and other strategic moves including acquisitions.

"Size is necessary if you want to be able to afford significant R&D, if you want to afford a sales network. There are advantages to size, in some respect. To achieve size, there are two ways: organic growth and external growth," Mr. Augonnet explained.

"It's clear today that we have to take action, to come back to a strong position of number two. So, we are looking for external growth possibilities. At the same time, we have also divested in areas where we considered that the activity was not core to our business. So, on the one hand we want to strengthen where we are strong, and where we consider that the product is not core or that we have little added value and when we want to develop technology at the high engineering end, we will divest and reuse that cash to reinvest it elsewhere," he said.

"We are in the top three in all our product lines. Where we were weak was in our low voltage product line and we have indicated that we are planning to divest this activity. The rest is more a question of making the proper alliances," he added.

Mr. Augonnet declined to confirm what companies, if any, Areva T&D is interested in acquiring at this time.

"Can the industry expect to see AREVA T&D establish strategic alliances and make acquisitions? The answer is clearly: "yes", he predicted.

The industry today, he explained, is far from being consolidated. The market place is still in a mode of consolidation.

"Look, for example at Japan over the last four years where you had on the one hand the merger of Toshiba and Mitsubishi and on the other hand Hitachi Fuji and Meidensha and we know there are plenty of opportunities in the United States where there are lots of regional companies but no dominant player," he said

At the same time, there are also the Chinese and the Koreans who have strong home markets but want to expand out of those countries except that, for the time being, they lack access to this market.

"The handicap that the Chinese have in the sale of engineered products is that their engineering and sales network is not sufficiently developed to distribute these products around the world. Selling goods like televisions through existing distribution networks is one thing. Selling an engineered product that you have to discuss with your customer is something quite different. And there are no significantly established distribution networks for the high voltage or medium voltage business. So, for them, it is a significant handicap," he said.

When you are expanding your market reach into countries like China, would it not be more effective to acquire a domestic company there and grow the business that way?

"We are indeed looking at the possibility of developing intelligent alliances in China, which may include the acquisition of local companies," he forecasted. ET

CHINA AWARDS TWO CONTRACTS TO AREVA

AREVA has been awarded two contracts within the framework of the project to extend the Ling Ao nuclear power plant in Guangdong Province.

Under the terms of these contracts, which together amount to almost 400 million euros, the group will supply the primary circuits and safety-related instrumentation and control systems for the third and fourth units.

During her trip to China last April as part of a delegation accompanying French Prime Minister Jean-Pierre Raffarin, Anne Lauvergeon, Chairman of the Executive Board, had already signed a technical assistance contract with CGNPC/NPIC (China Guangdong Nuclear Power Corp./Nuclear Power Institute of China) for the construction of the two new nuclear islands for the Ling Ao plant.

AREVA has also signed a number of agreements in the Chinese electricity transmission and distribution sector:

- Creation of a Joint-Venture with the Hudian-Xiamen Company for the manufacturing of medium-voltage interrupters.
- Construction of a medium-voltage circuit breaker factory wholly-owned by AREVA
- Creation of a research center in association with the University of Tsinghua. It will house programs to develop innovative power network protection processes, communications solutions and insulation technologies.

The AREVA group has been present in China for over 20 years. It was the country's reference partner for its nuclear program and currently employs almost 3500 people there. ET

5 to 10 arc flash explosions occur in electric equipment every day in the US*

Are YOU protected?

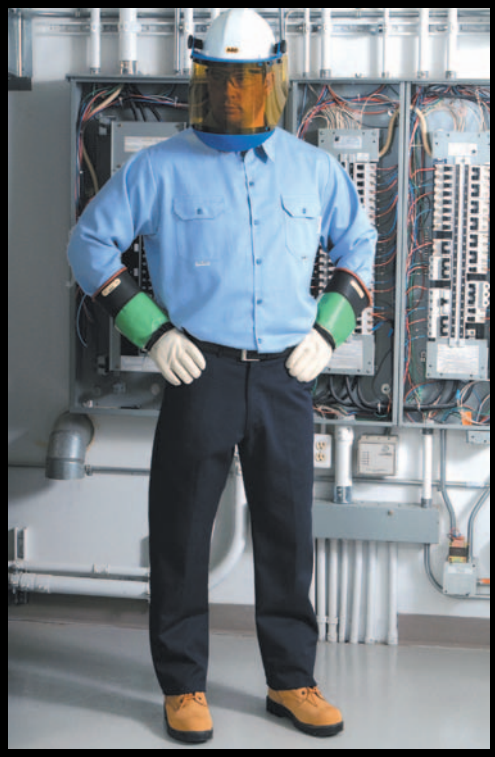

Everyday, workers in the electrical maintenance and utility industry work in environments that may expose them to hazards that could cause severe or fatal burn injuries. In the event of a momentary electric arc, everyday non-flame resistant work clothes can ignite and will continue to burn. Untreated fabrics continue to burn until the fabric is totally consumed and non-flame resistant synthetic fabrics will burn with melting and dripping causing severe contact burns to skin. The use of flame resistant clothing will provide a level of thermal protection, and after the source of ignition has been removed flame resistant garments will self-extinguish.

AGO INDUSTRIES INC. manufactures ARC/FR APPAREL to help protect workers in the electrical maintenance and utility industry from the hazards of electric arc flash exposures.

Shirts • Pants • Coveralls • Coats • Jackets • Faceshields • Hoods

Comply with NFPA 70E • Garments to ASTM F1506 Standards

AGO
INDUSTRIES INC.

PO Box 7132
London, Ontario
N5Y 4J9
CANADA

PH: 519-452-3780
FX: 519-452-3053
EM: mail@arcfr.net

Featuring
INDURA® Ultra Soft®
PBI® gold

www.arcfr.net

* CapSchell Inc.

THE SUSTAINABLE POINT: BALANCING DURABILITY, RELIABILITY AND COST

By Bob Fesmire, Communications manager at ABB

"Aging infrastructure" is a phrase that since the August 2003 blackout has been used so often to describe the state of the U.S. power grid, it's close to becoming a bona fide pop culture catchphrase. Almost invariably the logic goes like this: power systems are getting older, but investment is not keeping pace with the aging process and, as a result, grid reliability will suffer. However, citing equipment aging solely as a reliability issue ignores other important — and related — aspects of the problem.

While it's true that all utilities have aging systems, most of them have not reached the point where that aging process becomes critical from a reliability standpoint. For any given utility, there is usually not an "aging time-bomb" just a few years down the road. Instead, most face slow but steady increases in failure rates and replacement and repair costs. Some equipment is nearing the end of its designed life; other components have decades of service ahead of them.

Managing this multi-generational mix of equipment is a challenge that takes on different meaning depending upon who you talk to. Operations managers and engineers are primarily concerned with the technical issues of trying to understand the aging process and its effects on specific pieces of equipment and the system as a whole. Senior management, looking at equipment aging from a business perspective, is concerned with keeping costs under control and maintaining adequate customer service while delivering value to shareholders.

The good news, particularly from the financial perspective, is that T&D infrastructures do not age forever. Any set of equipment will eventually settle into a "sustainable point" where its average age, composite failure rate and annual replacement costs no longer increase from year to year. This is because, as equipment ages, increasing failure rates prompt more replacements, which, in turn, holds down the average age and failure rate of the system. Eventually, the number of new units (of age 0) added each year will counterbalance the aging and retirements of the rest of the group. System growth, replacement strategies, maintenance, and operating practices all enter into the equation, but the fact remains that for every T&D system, some point of equilibrium will arrive.

The bad news is that, when a sustainable point arrives, it might not be the most economically desirable from a business perspective. In fact, it might not even be tenable, given the utility's current rate schedule.

This is where a sound asset management program comes into play. Given enough historical data, the utility can determine where the equipment fleet is now (in terms of age, failure rates, replacement costs, etc.), where the sustainable point is, and how soon the system will reach that sustainable point under current practices. Then, armed with that information, the utility can optimize its O&M practices, replacement strategy and spending initiatives to move to a more economical and reliable sustainable point.

There are many ways utilities can "buy" reliability. Vegetation management programs, call center improvements, substation and feeder automation — the list goes on. All of these initiatives will differ in terms of cost as well as the nature of the reliability impact (e.g., if they affect mostly SAIFI or CAIDI, and by how much). They will also vary in terms of permanence (how long the improvement will last), and their effect on equipment lifetime.

It is possible to evaluate a wide range of options on a "bang for the buck" basis — the essence of asset management practice — but there is more at work here than a simple tug of war between reliability and cost. There is a third variable that impacts the sustainable point as much as either of those considerations, and that is durability.

This can be considered as being composed of both long-term reliability and lifetime extension (i.e., "how long can we expect to operate piece of equipment and at what level of reliability?") Obviously, the goal is to extend lifetime and reduce breakdown rates. However, "lifetime extension" usually refers to reducing or reversing current and near-term condition deterioration.

A transformer, for example, is made up of numerous components and materials that can be viewed as being in a "race to deteriorate first". Managing durability means identifying which components are likely to fail earliest, understanding how they interact with the rest of the transformer, and applying this intelligence to spending decisions. Clearly, you don't want to spend money avoiding one mode of failure only to suffer a failure from another source. The difficulty here lies in the fact that all transformers are not created equal. Each model has its own strengths, design characteristics and idiosyncrasies that will impact life extension decisions. For this reason, it is advisable for the utility to work with a manufacturer that has the equipment design and engineering data, the expertise to interpret it, and the special technologies needed to apply the life extension methods to get the desired result.

A sound asset management strategy must be based on an intimate understanding of the utility's T&D system, its failure rates and repair/replacement costs. The company must also be able to identify the best ways to "buy durability" for its unique mix of equipment. With that knowledge in hand, the utility can make better decisions about the balance of spending between initiatives affecting primarily equipment durability and those aimed mostly at operating reliability. In so doing, the utility can achieve a new, more sustainable balance that addresses the aging infrastructure problem beyond simple tradeoffs between spending and reliability. ET

The opinions expressed here are the author's own and do not necessarily represent those of ABB.

The DuPont Oval Logo, DuPont™, The miracles of science™, and Nomex® are trademarks or registered trademarks of E.I. du Pont de Nemours and Company. DuPont Canada is a licensee.

AFTER DEVELOPING MILITARY FLAK JACKETS AND BIOHAZARD CHEMICAL SUITS,

WHY THE CASUAL LOOK?

NOMEX® AP FLAME-RESISTANT INDUSTRIAL WORKWEAR. Call it what you will, this light-blue uniform is the only thing separating you and a 35,000°F arc flash. After all, electricians don't have the luxury of flak jackets or chemical suits or knowing when danger will strike. What they've got is technology. Innovation. And a firm, enduring belief that the strength of protective apparel is now available in workshirts.

BECAUSE YOU PLAN FOR THE UNEXPECTED

Arc flashes. They can start from faulty wiring. Improper insulation. Even a mere buildup of dust. But their destructive power, capable of reaching nearly 35,000°F, is responsible for thousands of electrical injuries every year. Not a good time to be questioning the flame-resistance of your workshirt. Which is why DuPont and its preferred fabric and garment manufacturers have engineered NOMEX® AP specifically to meet the requirements of NFPA 70E CATEGORY 2.

BECAUSE LOOKS ARE DECEIVING

Though comfortable and durable, NOMEX® AP has FR protection built into the fibre itself, providing superior defense against electrical arc and flash fire hazards. And unlike FR-treated cotton fabrics, which have flame-retardant chemicals topically applied to their outer surface, NOMEX® AP provides protection that won't wash out, bleach out, or wear away, and will maintain its professional appearance for over 150 launderings.

BECAUSE THERE'S NO ROOM FOR ERROR

Personal protection isn't about guesswork or assumptions or hoping things will work. It's about solid preparation, pure and simple. It's about nearly 40 years of experience helping define the nature of thermal hazards and developing relevant testing methods. It's about protective apparel that comes from the same line of materials as firefighter turnout gear and military flight suits. And it's about knowing that NOMEX® AP meets the safety requirements of OSHA, CGSB, ASTM, and CATEGORY 2 of NFPA 70E.

Firefighters use turnouts made of NOMEX® under the harshest of conditions.

Because life is worth protecting.
For more information please call 1-800-387-2122 or visit www.personalprotection.dupont.ca.

DUPONT®
The miracles of science™

CLEAN GENERATORS DELIVER A PEAKING SOLUTION FOR LONG ISLAND

The generator enclosures feature enhanced exhaust silencers and acoustic insulation to reduce noise.

When soaring summertime temperatures cause people to switch on their air conditioners, it drives up the demand for electricity – and can strain a utility's power distribution system. Nowhere is that more true than during hot summers in Suffolk County on Long Island, NY.

For several years, the local electric utility, Long Island Power Authority (LIPA), has been beefing up its summertime generating capacity with rented mobile peaking generators installed at several substations where loads have been high.

In the past, these rented peaking generators have been costly liquid-fueled turbines, primarily because of the need to meet local air quality regulations. But, in the spring of 2004, LIPA awarded a contract to Cummins Metropower, Inc. for 88 MW of clean, reciprocating engine mobile generators from Cummins Power Rent. The mobile generators have not only met stringent air quality regulations, but have reduced installation and operating costs for LIPA as well.

"LIPA's original bid specifications seemed written with turbines in mind," says Peter Schroeck, Energy Services Manager – Cummins Metropower. "However, we saw an opportunity to show them that our mobile reciprocating generator systems could deliver cost-effective power while remaining well below New York State's emissions limits. Turbines are more expensive to rent and to run. By comparison, mobile reciprocating engine generators have a much lower rental cost, and are about 30 percent more efficient at turning BTUs into kilowatts-hours."

Over the course of about 10 weeks, 24 containerized generator sets at the Shoreham substation plus 24 generator sets at Holtsville substation, both on Long Island.

State-of-the-art emissions controls

Each generating unit featured a 2 MW Cummins Power Generation reciprocating engine generator equipped with state-of-the-art emissions control technology designed to meet the New York Department of Environmental Conservation's stringent air quality standards. The emission control system consists of an oxidation catalyst/exhaust silencer to reduce hydrocarbons and carbon monoxide; a regenerative particulate trap to reduce particulate matter; and a selective catalytic reduction (SCR) system that injects aqueous urea into the exhaust stream to reduce nitrogen oxides. The total result is more than a 90 percent reduction in nitrogen oxide, carbon monoxide and particulate matter. Cummins Metropower also customized the generator enclosures with special acoustical hoods to meet LIPA's noise standards.

The generator sets are fueled with ultra-low sulfur fuel, with less than 30 PPM of sulfur. Each unit has a fuel tank

Continued on Page 14

SALISBURY

ISO 9001:2000 Registered

Only One Company Covers All Your Needs.

Salisbury is your complete source for personal electrical safety products and arc flash protection that complies with ASTM, NFPA 70E and International Requirements.

Salisbury is the leader in the manufacturing of personal protective equipment and live line tools to protect electrical workers from the hazards of their job. Only Salisbury offers a complete solution with insulating rubber gloves, blankets, line hose, temporary grounding equipment, voltage detectors, clamp sticks, distribution dead-end insulators, plastic cover-up and dielectric boots.

We at Salisbury know that lives depend on the quality of our products. That's why Salisbury's production facilities manufacture products that comply with the highest possible standards and regulations.

PROTECT YOURSELF WITH THE BEST

Salisbury offers a complete line of arc flash personal protective equipment and clothing. Salisbury's PRO-WEAR™ Arc Flash Clothing Line is the most extensive in the industry providing protection 8 cal/cm² - 100 cal/cm². Our arc flash protective items are sold individually or in convenient kits. Salisbury is proud to offer you this opportunity to simplify your PPE purchasing process. Make Salisbury your one stop manufacturer of arc flash safety products that comply with ASTM 1506 requirements and NFPA 70E standards.

Salisbury offers a complete solution to your electrical hazards with arc flash face shields, insulated tools, temporary grounding equipment, voltage detectors and a wide variety of rubber insulating products.

WHEN IT CONCERNS SAFETY, QUALITY CANNOT BE COMPROMISED

The name Salisbury on safety products is your assurance that you are using the finest equipment available.

Your safety is backed by our 150 years of expertise.

SALISBURY PRO-WEAR ARC FLASH PROTECTION

SALISBURY
Setting industry standards since 1855.

7520 North Long Ave. Skokie, IL 60077 Phone: 847.679.6700 Fax: 847.679.2401
E-Mail: info@whsalisbury.com **www.whsalisbury.com** **www.arcsafety.com**

Long Island

Continued from Page 12

with a capacity of 2,150 gallons and a urea tank with a capacity of 600 gallons. Fuel consumption per generator set is approximately 100 gallons per hour. Urea consumption is approximately 8-10 gallons per hour for each generator set.

Each unit includes a 600 gallon tank for the urea injection system that controls nitrogen oxides.

Mobile generators deliver flexibility

"The decision to go with reciprocating engine generators rather than liquid-fueled turbines was primarily economic," says LIPA's Mike Milligen, "but it also had to do with portability. In case of emergencies, the smaller mobile units could theoretically be deployed to some of our other distribution substations or local distribution 'hot spot', whereas that would not be feasible with a 25 MW turbine."

An additional 12 MW of rental power will be added to the system early next summer, says Milligen. "Our transmission and distribution engineers have been making modifications to our system to accommodate summer peaking loads. They want additional capacity in place in the event of transmission component failures that would require actual generation to replace the lost power. Consequently, six more 2 MW rental units will be installed next summer at the Shoreham substation, bringing the total capacity of the project to about 100 MW."

Remote monitoring, dispatching

Cummins Metropower is responsible for remotely dispatching and monitoring both substation sites from its New York headquarters in the Bronx. All 48 generator sets are currently monitored and controlled using PowerCommand® software from Cummins Power Generation and Echelon® TP-78 network protocol. LIPA, in cooperation with the New York Independent System Operator, notifies Cummins Metropower two hours in advance of an impending system peak to start the generators and bring the 88 megawatts onto the system for additional capacity.

"Power Rent units offer LIPA a high degree of flexibility and scalability," said Larry Fetting, General Manager – Cummins Power Rent. "They can add generation in two-megawatt increments wherever they need it. In addition, Cummins Metropower is handling all maintenance and repair on the rental units, leaving LIPA free to concentrate on serving their customers." LIPA has the option of keeping the peaking system in place for up to four years – to 2007.

New exhaust after treatment strategies such as SCR, particulate traps and reduction catalysts are helping to make reciprocating engine generators a cleaner and more economical choice for power producers. Coupled with their higher efficiency, portability and operational flexibility, these traits are giving new life to reciprocating engine generating technology.

Cummins Power Rent is an international supplier of rental generator sets and a division of Cummins Power Generation. ET

Cummins Power Rent units stand ready to supply 88 MW of peaking electricity to the Long Island Power Authority.

Upgrading electrical switchgear? Magna has the solution.

Improve safety and ensure the reliability of your medium voltage switchgear with arc-resistant retrofits by Magna.

Arc-resistant retrofits are available for most manufacturers and vintages of metal-clad and metal-enclosed switchgear from 5-35 kV.

MAGNA ELECTRIC CORPORATION

Designed and tested to EEMAC G14 -1 and exceeds IEEE standard C37-20-7

NFPA 70E requires this level of personal protective equipment when operating non-arc-resistant switchgear.

Arc-resistant retrofits provide through the door racking of circuit breakers, reducing the risk of worker injury in the event of a failure and eliminating the need for flash suits.

Heavy duty doors with multiple hinges and extra strength locking devices help ensure the door will not open under extreme force.

Reduced downtime. Arc-resistant retrofits can generally be done in less time than switchgear replacements.

Magna offers:

- Power system arc flash studies
- Circuit breaker retrofits
- Relay protection upgrades
- NETA certified technicians
- 24-hour emergency service nation-wide

INTERNATIONAL ELECTRICAL TESTING ASSOCIATION INC. NETA

Magna Electric Corporation

851 - 58th Street East,
Saskatoon SK
S7K 6X5

T: 1-877-955-8131
F: (306) 955-9181

www.magnaelectric.com

Regina, SK Winnipeg, MB North Bay, ON Mobile, AL
Edmonton, AB Calgary, AB Vancouver, BC Burlington, ON

ENERGY INNOVATION NETWORK FORMED TO BRING PEOPLE AND RESOURCES TOGETHER

By Don Horne

Bringing people and resources together is the idea behind the Energy Innovation Network (EnergyINet).

R. W. (Bob) Taylor, HUB Team co-leader of EnergyINet and a consultant for Infinite Scope Management, sees the answers for North America's energy needs coming from greater communication through a network of government, research and industry experts working to close the innovation gap between current energy production and Canada's future prosperity.

"Most important, we need all the sources of energy to fuel Canada's needs in the future," says Mr. Taylor, pointing to the immediate electricity needs of the nation compared to future technologies that are still one or two generations away from coming on-line.

"Gassification technology is coming, but we can look at cleaner coal technologies, wind, solar and nuclear. We can't just focus on one to the exclusion of all others."

EnergyINet has identified six priorities for itself, establishing a network of global experts to:

- Develop alternate and renewable energy sources;
- Enhance the value of bitumen and heavy oil, while reducing the amount of energy required for its production;
- Demonstrate and use the new generation of clean coal technologies;
- Reduce greenhouse gases and other emissions;
- Maximize the recovery of conventional and unconventional oil and gas resources;
- Develop technologies to more effectively treat and recycle water and reduce water consumption.

The vision of EnergyINet is to be a road map - or super road map - of technologies of energy development from where we are today to where we are headed, says Mr. Taylor.

"It is vital for Canadians to have a road map to the future. Shutting down the coal-fired plants are not reasonable options. Coal constitutes 25 per cent of electricity generation (in Ontario), and there is a 3 per cent growth in electricity demand each year. That means by 2007, when the coal plants are supposed to be shut down, demand will have risen by 15 per cent."

For a province like Saskatchewan that leans heavily on coal-fired electricity production, clean coal technology is a viable option.

"Saskatchewan will make a strong contribution to EnergyINet," says Eric Cline, Minister of Industry and Resources. Saskatchewan has a strong interest in clean coal technology and in new ways to tap the roughly thirty billion barrels of oil resources in Saskatchewan not currently recoverable by conventional means. EnergyINet is consistent with our overall goal of building a green and prosperous economy."

Alberta's Energy Minister Guy Boutilier sees EnergyINet serving "as a catalyst for provincial and federal governments, industry and other partners to invest in our universities and research agencies so that we can make a difference in the environment, not only in Canada, but around the world;" adding that "Alberta believes that technology holds the key to addressing climate change."

The Vice President of Sustainability for BC Hydro Bruce Sampson applauds the formation of the new group, saying that "EnergyINet is designed to fuel ingenuity and innovation, and in the process, will champion a wide range of important programs that will help Canada meet growing demands for energy and be a leader in renewable energy and energy efficiency as part of the overall energy mix."

Beyond developing new technologies, reducing demand - and especially peak-hour demand - is a goal that everyone can pitch in to help achieve.

"I am a fan of smart metering," says Mr. Taylor. "In Alberta, I worked with a developer to install smart meters in a

Continued on Page 42

Convert any 6-pulse drive to 12- or 18-pulse performance with the

MTE MATRIX™ HARMONIC FILTER

- Cost effective
- Compact size
- Highly reliable
- Cabinet or panel mount
- Guaranteed performance

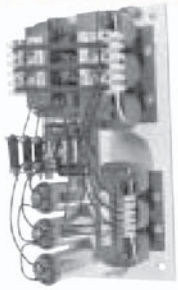

Why spend more money for 12- or 18-pulse drives when you can get equal or better performance with standard 6-pulse drives using an MTE Matrix Harmonic Filter! And, the Matrix Harmonic Filter gives you guaranteed performance.

www.mtecorp.com
Phone: **262-253-8200**
Fax: **262-253-8222**
W147 N9525 Held Dr.,
Menomonee Falls, WI 53052-9013

MTE CORPORATION
Guaranteed Results!

Niagara Falls Hydro received the Outstanding Business Achievement Award from that city's chamber of commerce. From left to right are: Kim Craitor, Niagara Falls MPP, Tom Garlock, Chair, Niagara Falls Chamber of Commerce, Dalton McGuinty, Premier of Ontario, Janie Palmer, Chair, Niagara Falls Hydro, Suzanne Wilson, Director of Finance, Niagara Falls Hydro, and Brian Wilkie, President, Niagara Falls Hydro.

NIAGARA FALLS HYDRO RECEIVES BUSINESS ACHIEVEMENT AWARD

By Don Horne

Niagara Falls Hydro has been recognized for its success as a company and for its contributions to the community.

The utility received the Outstanding Business Achievement Award from the Niagara Falls Chamber of Commerce at the Chamber's recent annual awards ceremony, where Premier Dalton McGuinty was the key-note speaker.

"To be recognized for our efforts is a real honour," said Niagara Falls Hydro President Brian Wilkie. "The Board and staff have been very committed, through both policy and action, to ensuring that Niagara Falls Hydro is an active participant in the growth and vitality of our community."

The City of Niagara Falls has been experiencing strong economic growth in recent years and Niagara Falls Hydro has responded by investing millions of dollars into the local electricity distribution infrastructure. The investment includes a new eight million dollar Municipal Transformer Station.

As a company, Niagara Falls Hydro has been a generous contributor or sponsor to many community events, organizations and services, including the Greater Niagara General Hospital Foundation, the annual Winter Festival of Lights, the United Way and the local Heritage Trail. Employees have been very generous with their time and donations to countless charity events.

"Brian Wilkie has provided strong leadership. He and his staff deliver on the philosophy that good business practices and commitment to the community should always work hand-in-hand," said Janie Palmer, Chair of Niagara Falls Hydro.

Niagara Falls Hydro serves approximately 33,000 customers. ET

Hubbell Canada LP
Fargo® Automatic Guy Wire Splices and Deadends

Guy Wire Connections for:
High Strength, Common, Siemens-Martin, Utilities Grade, Bell System and Alumonized guy strand types (all seven stranded).

GLS 5000 Series

GDE 5100 Series

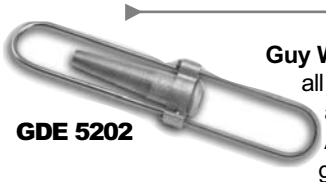

GDE 5202

Guy Wire Connections for:
all types of 3/8" guy strand and selected types of AWAC and Alumoweld guy wires.

HUBBELL POWER SYSTEMS, INC.

HUBBELL CANADA LP
870 Brock Road South • Pickering, ON L1W 1Z8
Phone: (905) 839-1138 • Fax: (905) 839-6353
www.hubbellpowersystems.ca

HUBBELL POWER SYSTEMS, INC.
210 N. Allen • Centralia, Mo 65240
Phone: (573) 682-5521 • Fax: (573) 682-8714

HUBBELL DE MEXICO, S.A. DE.. CV
Av. Coyoacan No. 1051 • Col. Del Valle • 03100 Mexico, D.F.
Phone: (525) 575-2022 • Fax: (525) 559-8626

VECTOR JUMP RELAYING: AN ECONOMICAL SOLUTION FOR DISTRIBUTED GENERATION ISLANDING PROTECTION

By Arvind Chaudhary, Cooper Power Systems

Introduction

The use of Distributed Generation (DG) in distribution power systems has increased over the last decade, spurred by the ability to defer the building of new substations and by new cost-effective technologies (fuel cells, micro-turbines, etc.). Interconnecting dispersed generation to the utility system requires robust relaying to detect the loss of the utility system and to take preventive measures. One critical measure is to disconnect the local generation from the utility system (intentional islanding) before the utility tie recloses. This islanding avoids damage to generator shafts. The islanding process can also include selective disconnection of less important local loads, to ensure that any important process loads can continue to be supplied by the local generation.

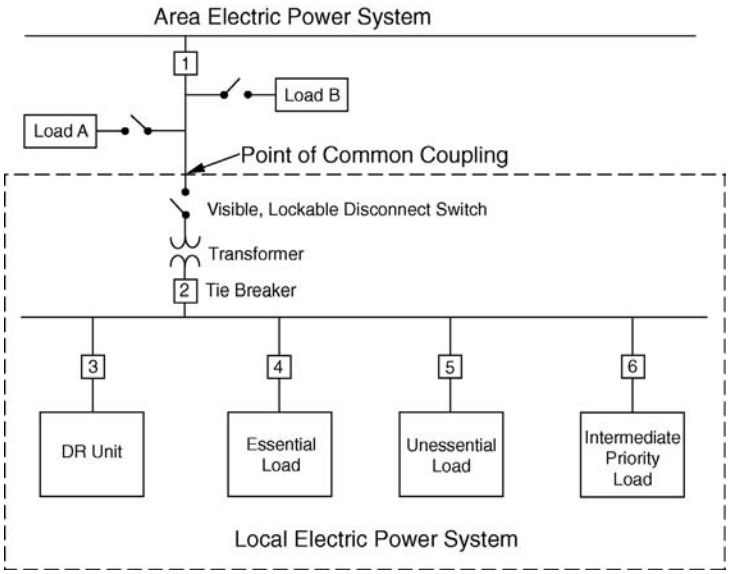

Figure 1. Interconnection diagram with definition of terms.

Figure 1 shows a typical industrial DG configuration. Breaker 1 is owned and operated by the utility. Breaker 2 is owned and operated by the DG owner. One of the key relaying requirements is to prohibit the reclosing actions of Breaker 1 for a fault on the line between Breaker 1 and the point of common coupling. The relay must stop acting as a source, and thereby energizing the Area Electric Power System (EPS) to which it is connected, prior to reclosure by the Area EPS. Traditionally, a leased communication line is used to provide a transfer trip signal to Breaker 2 the moment Breaker 1 opens in response to a fault. Since Breaker 2 is now open (the local DG unit is islanded), the reclosure sequence of Breaker 1 can now take place without the possibility of any damage to the distributed generator.

One concern with this technique is that the communication channel and equipment to implement the transfer trip can be expensive. Another concern is the dependency on this communication channel to implement the trip. Another technique that can be used for the detection of islanding of the local power system is the use of a vector jump relay. This type of relay does not require communications equipment and is comparatively economical.

The vector jump relay detects a sudden change in the direction of power flow by examining the system voltage signal. This method is called a vector jump – the step change in apparent frequency that occurs when a distributed generator and its local load are suddenly disconnected or unintentionally islanded from the utility. The relay's operation is made more secure and dependable by adding voltage and frequency conditions to the vector jump.

ISLANDING DETECTION USING VECTOR JUMP RELAY

In the case of a generator operating in parallel with a utility distribution network, when the utility network is suddenly disconnected (Breaker 1 of Fig. 1 opens), the generator becomes islanded and is left to supply all of the remaining connected load, including the share of load formerly supplied by the network. The vector jump relay includes an element designed to detect the disturbance produced by the sudden variation of the load at the terminals of a generator. This disturbance results in a proportional variation of the angular displacement between the generator's electromotive force E and the voltage at its terminals or point of relaying, V (Fig. 2 and 3).

The resulting $\Delta\alpha$ of the angle a is referred to as a vector jump or vector surge. If the circuit breaker connecting the islanded generator to the rest of the network is automatically reclosed, it is possible that the voltage displacement between the generator's bus and the network can be too large for safe paralleling of the generators. Rapid detection of this condition provides the opportunity to:

- Trip the utility tie breaker (Breaker 2) or the generator's circuit breaker (Breaker 3) before the reclosing of the tie utility's breaker occurs, thus avoiding possible serious damage to the generator itself.
- After tripping Breaker 2, it is possible to trip any non-critical local load in order to match the generator's output to that of any critical processes in an industrial environment.

Such a relay can detect a vector

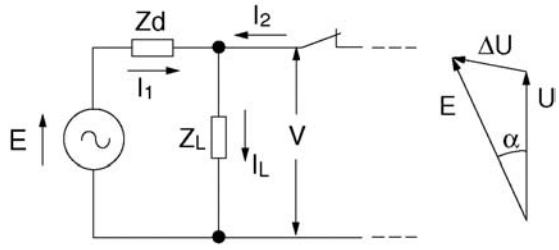

$$\Delta U = \overline{E} - \overline{V} = \overline{I}_1 \bullet JZd$$

Figure 2: Normal _ between generator and measured voltages.

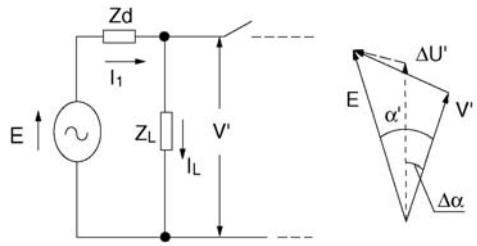

$$\Delta U' = \overline{E} - \overline{V}' = \overline{I}_L \bullet JZd = (\overline{I}_1 + \overline{I}_2)\, JZd$$

Figure 3: Resulting $\Delta\alpha$ between generator and measured voltages.

jump in a 2° to 30° range, resulting in a trip signal being issued in less than three cycles (Figure 4). One of Cooper Power Systems' relays uses a moving average of the last five cycles' periods as a comparison value in order to reduce spurious operations. At each cycle a comparison is done between the average of the last five cycles' periods to the average of the last five cycles' periods measured at the end of the previous cycle. The detection of the disturbance can be made in either single-phase or three-phase modes.

- In the single-phase mode, tripping takes place as soon as a measured $\Delta\alpha$ exceeding the set level is detected on one of the three-phase voltages.
- In the three-phase mode, tripping takes place only if the value of $\Delta\alpha$ above the set level is detected on all three phases at the same time.

Single-phase mode is more sensitive than three-phase mode in detecting vector jump conditions; however, it is also more sensitive to spurious disturbances. An undervoltage element is used to block the vector jump function if the voltage drops below a user adjustable level threshold. A contact input operated by a normally open auxiliary contact (52a) of a circuit breaker blocks the vector jump functions when the circuit breaker is open, as well as for a period of time after closing the breaker.

The value of $\Delta\alpha$ as a function of the power variation of the generator (ΔP) in percentage units of its rating as it passes from the normal situation to an islanded situation may be approximated as:

$\Delta\alpha = (0.3 - 0.4)\ \Delta P$

Where the 0.3 multiple is generally more applicable to large generators and the 0.4 multiple to small generators. The use of a computer-based transients analysis program can be used to more accurately determine the $\Delta\alpha$ setting in order to

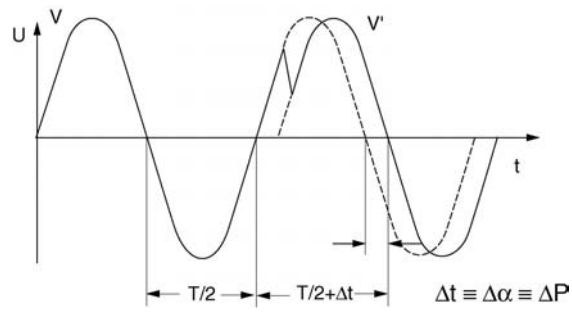

Figure 4: Effect on system voltage as seen by relay due to vector surge.

avoid spurious trips.

SETTING OF THE VECTOR JUMP FUNCTION

The definitions for relay dependability and security are:

- Dependability is defined as the measure of certainty that the relays will operate correctly for all faults for which they are designed to operate.
- Security is defined as the measure of the certainty that the relays will not operate incorrectly for any fault (e.g., a fault outside the intended zone of protection).

The vector jump relay must be set to pickup when the util-

Continued on Page 21

LEADING ELECTRICAL GROUPS SAVING TIME, BOOSTING SAFETY WITH NEW TECHNOLOGY

An internationally acclaimed hydraulic bolt tensioning system from Australia is being used by some of the world's leading electricity organizations to achieve major time and money savings when manufacturing and maintaining turbines.

Technofast Industries' HydraNuts are being employed in manufacturing by Mitsubishi Heavy Industries in Japan and in maintenance by Kospo electricity generation authority in Korea, where they are cutting both downtime and labour costs on Gas Turbine casings.

HiTemp versions of the HydraNut – which recently won an internationally coveted Platts Global Energy Award – are also being used on nuclear powered steam turbines in the U.S., where they reduce the time taken for regular maintenance tasks from about 20 hours to fewer than two hours.

The new system uses precise and rapidly employed hydraulic tensioning technology to fasten and loosen bolts. The technology supersedes cumbersome and time-consuming manual methods such as heavy flogging tools or costly heat elongation.

Instead of relying on traditional wrenches or torque tools to fasten nuts with twisting forces of various degrees of accuracy, HydraNuts apply hydraulic force vertically and evenly without torsion to stretch the bolt with exactly the degree of force needed for fastening in different applications. Loosening the nuts is simply a matter of releasing their lock rings and their hydraulic tension.

The new system can cut the time taken for major jobs from days to hours – and cut routine jobs from hours to minutes, says Technofast Chief Executive Officer John Bucknell. The HydraNut is so advanced that the HiTemp version has been approved by the U.S. Nova commercial nuclear organization for the nuclear industry, where it both speeds up the job of multiple bolt fastening/loosening and reduces ionizing radiation exposure times for workers.

High efficiencies have also been achieved by use of this system in Asia-Pacific applications, including their use as direct replacements for standard nuts on 7FA gas turbine half and vertical joints. In this application, a HiTemp HydraNut system is interconnected and pressurized simultaneously, which gives an evenly applied load over the full flange and ensures that bolts are correctly loaded. Using HydraNuts, the half joint bolts (20 2.25 inch and 10 2 inch) were tensioned in one hour and 12 minutes. Vertical bolt joints (42 1.75 inch and 8 2 inch) were tensioned in one hour and 50 minutes.

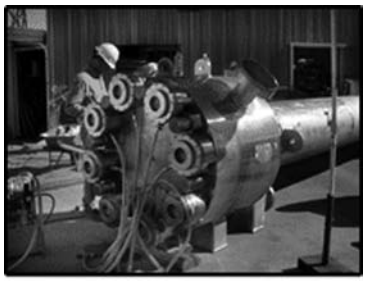

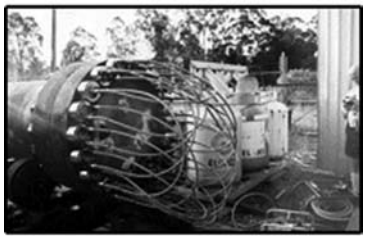

Testing HydraNuts (top). HydraNuts on heat exchanger (above).

"The previous method of torque tightening the bolts was time-consuming and labour intensive, causing bolt, nut and flange damage, thus making subsequent removal difficult," said Mr. Bucknell.

Different designs have been used by Mitsubishi to speed up production of their massive stator cores for large steam turbine generator sets. Using the new technology, the through bolts that clamp the stator core rims together are tightened simultaneously, applying an even and accurate load across the whole assembly. This increases production capabilities for the manufacturers while enhancing the accuracy of the job and reducing hazards to workers using clumsier and slower methods.

Westinghouse Electric and Curtiss Wright have taken advantage of the time savings and hazard reduction offered by Hi-Temp HydraNuts, which are so called because of their patented seal design's capability to be energized after thousands of hours at the elevated temperatures encountered on turbine casings. Ease of removal is assured by the fact that the bolts are held in tension while the lockring is unscrewed under zero load.

Judges at the 2004 Platts Global Energy Awards in New York said the HiTemp HydraNut was outstanding technology – "Technofast's revolutionary application of high-temperature hydraulic tensioning is revolutionizing maintenance in nuclear facilities, permitting the completion of complex bolting operations in hours rather than days, saving its customers millions of dollars in downtime, and drastically cutting workers' exposure to dangerous ionizing radiation."

Mr. Bucknell said Technofast's High-Temperature Hydraulic Nuts and Stud Tensioning Systems were replacing the current practices of using heat-induced elongation or torque methods to tension studbolts.

"These practices are costly not only because of the number of studbolts that have to be replaced, but also because they are very time consuming. The global nuclear industry probably has the world's highest safety standards and it imposes a major cost to any unnecessary exposure to radiation. They also offer non-nuclear electricity companies major benefits in reducing downtime and increasing production," he said.

HiTemp HydraNuts – which can withstand temperatures up to 650 deg Celsius (1200 deg Fahrenheit) – also have widespread applications throughout other efficiency and safety-conscious industries, says Mr. Bucknell. ET

Continued from Page 19

ity main feed is disconnected. It is essential that there is an interchange of power occurring at this time. If there is no interchange of power, it is impossible to detect the loss of the utility main feed. This is dependability. In order to be certain that the relay will detect the system's vector jump, the setting for the vector jump should be set lower than the expected vector jump that occurs during the minimum power interchange.

The vector jump relay has to be set such that it does not operate for an external fault on the system and also does not operate when the largest load is being picked up by the local generator. Ideally, the vector jump relay should not pickup for a fault on the internal system. This is security. These settings for the vector jump should be higher than the vector jumps these conditions create to avoid unwanted operation with certainty. Security of the relay can be enhanced by using the three-phase mode in preference to the single-phase mode. The vector jump function can be ANDed with underfrequency AND undervoltage AND (.not. negative sequence voltage) AND (.not. zero sequence voltage) elements for even greater security.

It is recommended that the vector jump relay voltage input be fed from voltage transformers located at the local generator terminals. This location will provide larger vector jump magnitudes and the ability to trip the local tie breaker (Breaker 2 in Fig. 1) when the main utility feed is lost. The 52a contact of local tie breaker is required as an input to the relay. This 52a contact input is used to block the vector jump functions when the circuit breaker is open as well as for a period of time after closing the tie breaker with an appropriate synch-check function.

Information needed to provide the settings:

1. The rating of the local generator.
2. The minimum interchange power condition, either to the utility or from the utility.
3. The change in the generator's terminal voltage angle ($\Delta\alpha$) when the utility main is lost at minimum interchange power. Also, the change in frequency and in voltage under this condition.
4. The change in the generator's terminal voltage angle ($\Delta\alpha$) when an external three-phase fault occurs on the main utility and is cleared by the main utility relaying system. Also, the change in frequency and in voltage under this condition. Note that three-phase fault condition is specified, implicitly assuming use of the three-phase mode of the relay.
5. The change in the generator's terminal voltage angle ($\Delta\alpha$) when an internal three-phase fault occurs on the local system and is cleared by the local system relaying. Also, the change in frequency and in voltage under this condition. Note that three-phase fault condition is specified, implicitly assuming use of the three-phase mode of the relay. ET

Arvind Chaudhary (S'85–M'85–SM'94) is a Staff Engineer with the Protective Relays and Integrated Systems Group, Cooper Power Systems, South Milwaukee, WI.

INCREASING POWER REQUIREMENTS DRIVE MODULAR SUBSTATION TECHNOLOGY

By Rich Marking-Camuto, P.E.

A crane unloading a skid-full of modular substations to its appropriate installation site.

Introduction

We live in a world increasingly dependent on reliable power. More and more, industries and businesses rely on electricity to operate and generate revenue. Population growth warrants electricity in previously unoccupied rural areas. New technologies are driving innovations that require power to perform. National and organizational security is almost solely reliant on power.

At the same time deregulation is forcing utilities to reconsider capital upgrades for fear of not recouping investment. Paradoxically, deregulation increases the demand on utilities to service customers better, since customers now have the option of switching to a competing utility. Shrinking workforces and budgets are also making it more difficult for utilities to realistically meet the demands of its consumers and remain profitable.

Due to these competing forces – customer requirements for more reliable power in an environment lacking sufficient manpower and a guarantee of financial return –utilities are always looking for new, cost-effective methods in transmission design and implementation that increase reliability and quality.

One arising, innovative approach to help achieve these goals and resolve these issues is the application of the modular substation. Modular substations function similar to traditional substations but consist of pre-assembled equipment installed on a structural base that is pre-wired and tested before shipping. Once delivered to the site, only the incoming and outgoing connections need to be made to get the equipment online.

Electrical substations transform voltage levels from a high level to a level that consumers can use, distribute power from one or a few lines in to many lines out, and condition power using regulators and/or capacitor banks. As time progressed traditional open-frame substations became the preferred method to accomplish these goals. But now, modular substations are grabbing the attention of utilities as a viable option to traditional substations.

Compared to traditional substation construction methods, the modular substation approach makes the process of

delivering power more cost effective.

In the Beginning…

Most electrical substations are designed as open construction. The current carrying conductors, or bus, are overhead on wooden poles or steel frames and the conductors are exposed. Due to the open construction design of such substations, fences are required causing an unsightly experience. Technology advances in the industry have led to the traditional padmount substation for medium voltage projects (5,000-35,000 volts). With traditional padmount substations all the equipment and connections are within tamper-proof metal enclosures and the feeder conductors are underground, hence fencing is not required. Traditional substation designs are still needed for high voltage transformation, but the modular substation concept was created as an enhancement of traditional padmount specifications.

The modular substation hardware inside of the protective outer structure.

This modularity concept consists of primary and secondary protection devices assembled as one-piece units with the main power transformer and is about two decades old. Due to the delay of trend implementation in the utilities industry, companies have recently been offering all of the advantages of modular substations. Cooper Power Systems' version of the modular substation was introduced last year.

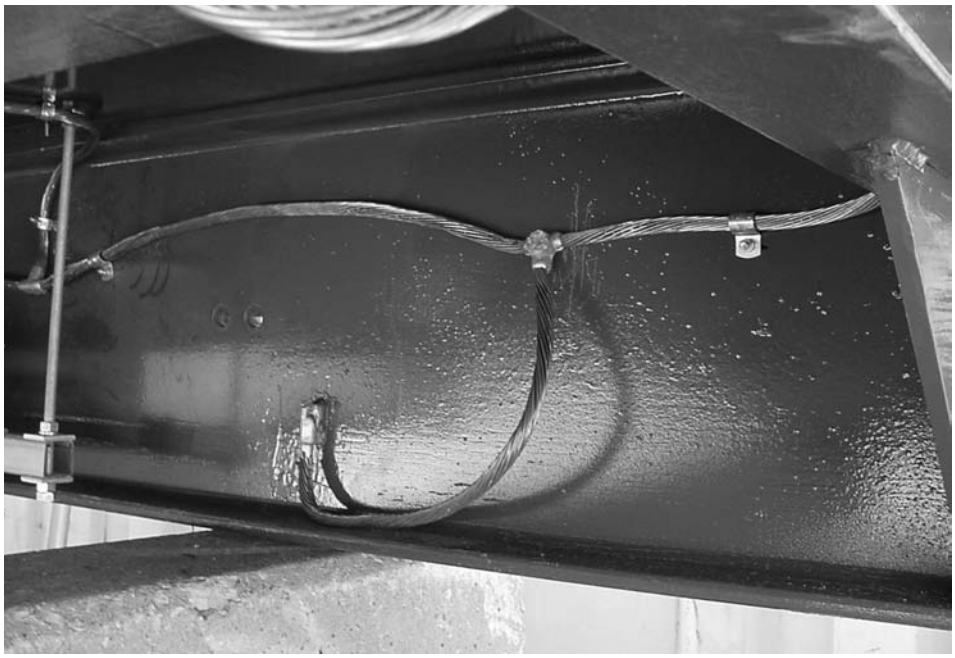
Representative of the wiring capabilities of modular substations.

Cost Effectiveness

Attrition is robbing the utility industry of its workforce. Layoffs, early retirements, and consolidations are all conspiring to rid the industry of its backbone – the experienced worker. In those rare instances where employees who left are being replaced, younger, more inexperienced workers are filling those roles.

And because workload levels are remaining the same or even increasing, utilities are trying to overcome deficiencies in their reductive and inexperienced workforce by looking at outside resources for more standardized or turnkey design approaches that allow them to maximize current resources from both a maintenance and engineering standpoint.

Modular substations are accommodating to these trends as they cut project completion time in half and provide a turnkey option. Installation of modular substations can take as little as a few hours instead of days, limiting the amount of time power is down.

The majority of construction on a modular substation takes place on the vendor's premises. Here, the entire product is manufactured and the electrical connections within the substation are administered to. The pre-assembled construction of the modular substation saves utilities a large amount of money on field labor costs. In fact, field labor costs can be cut by up to 75 percent through implementing the modular substation approach. Cooper Power Systems' cus-

A near-complete set of modular substations on skids.

tomers claimed a 25 percent reduction in project costs when comparing the cost to install the modular substation versus conventional methods. Most of this savings is attributable to reductions in labor costs. Installation time was cut from days to hours.

Project management costs are also positively impacted. Since responsibility for construction and delivery of the modular substation rests solely on the vendor, they, in effect, become the project manager. The conventional approach to getting a substation up and running included hiring an engineering firm to write a RFQ and design the substation, bidding equipment and installation, and installing and commissioning the equipment. These three steps were individually dealt with and proved a tedious and lengthy process.

One contract is now all it takes to complete a modular substation project from beginning to end. Cooper Power Systems provides a turnkey E-P-C (Engineer-Procurement-Construction) approach, saving time and money. We engineer the project, including electrical system measurements, system analysis, design and specification, then coordinate the procurement of the proper equipment from multiple factories and get it to the job site on time, and finally oversee the construction phase of the project. With this turnkey approach, the modular substation supplier is relieving the customer of some, if not all, technical and financial risks associated with any project.

Constructing the modular substation at a vendor's facility also avoids costly schedule delays and interruptions due to adverse weather conditions. Projects can be greatly hindered due to adverse weather conditions that slow down field labor in natural environments. Summer months can yield daily temperatures exceeding 100 degrees. During winter months in some environments, crews are confronting sub-zero temperatures, snow, and icy road conditions – a transportation barrier that may obstruct or prevent field labor and equipment from traveling to the job site. Constrictive winter clothing can also slow a workforce down.

For example, Canadian miners indicated to us that the high cost of field labor and the scarcity of qualified people forced them to consider solutions that reduced field labor cost, time, and crew size. The modular substation was the desired solution.

Even during the harshest of seasons, construction in an environmentally-controlled facility allows workers to effectively and efficiently complete projects in a setting where labor pace and materials are unaffected by Mother Nature.

High Quality and Reliability

Once online, modular substations perform at the same level of quality as traditional substations, however modular substations cut offline time during installation from several days to just a few hours. Valuable days of electricity are saved for consumers through the implementation of modular substations, boosting its reliability credentials with the general public.

Recent improvements in substation equipment technology have shifted standard products designed for padmount applications in the field to become assembled in the factory. The same high quality of traditional substations can be expected while, at the same time, reductions in field labor, cost, and project timeline are realized due to modularity.

In addition, any work order changes needing to be made during the modular substation construction process would be implemented within the factory setting. This offers more reliability than perform-

WANTED
Power • UPS • NETA Certified
Field Service Engs • Techs • Mgrs
Design • Vibration • Motor Repair
Sales • Power Quality • Pred/Prev Maint
Since 1980, we've specialized in placing people who test, repair, maintain or sell electrical apparatus, electronic or electric power equipment. Nationwide. All fees company paid. Call or send confidential resume to LISA LINEAL:
LINEAL Recruiting Services
46 Copper Kettle Road, Trumbull, CT 06611
TOLL FREE 877-386-1091 • Fax: 203-386-9788
Email: lisalineal@lineal.com • www.lineal.com
Se Habla Español

ing these work order changes in the field.

The modular substation is constructed and tested before it ever reaches the field. This guarantees the reliability of the pre-wired assembly. The only other connections needing to be made at the delivery site are the incoming power, outgoing power, and grounding. Each modular substation will begin functioning upon these minimal electrical connections, again saving field labor costs.

Flexibility

Another key advantage the modular substation holds over the traditional substation is its flexibility. As communities increase in population and subdivisions spring up in a matter of weeks, space is becoming scarcer, especially for the unappealing steel structures in residential and commercial environments. Utilities are looking to blend in substations to their worksite environment as much as possible, increasing home and commercial property value. The modular substation design provides installation flexibility in that it allows the project to be tailored to the utility's requirements.

Several utilities are implementing modular substations due to their flexibility for short-term solutions. This modularity concept provides these capabilities in that it can be readily uninstalled and relocated depending on the utilities' needs.

Confronting deregulation's space requirements, the modular substation's compact footprint is a highly desirable flexibility specification. For ease for delivery, Cooper has set limits on the size of each module to a maximum width, length, height, and weight of 102 inches, 40 feet, 10 feet and 35 tons, respectively. However, if need be, we will build larger with special transportation arrangements. A better solution to a larger size substation is to design multiple modules that snap together once delivered to the field, convenience modular substations can readily provide.

Having the controlled environment in which to work allows vendors the time needed to house the equipment, creating a low-profile design. The cable and control wires are pulled through the trays and built directly into the skids. Everything is generally housed; therefore it is inherently more appealing to the eye of the consumer.

The flexibility of design allows the modular substation to fit easily in any setting: residential, commercial, urban, suburban, or rural. As deregulation progresses, the modular substation is an obvious forward thinking innovation as space requirements are greatly saved.

Conclusion

As decreases in staff coincide with increases in the need for more reliable power, utilities continue to search for innovative solutions within strict budgetary guidelines. One such solution is the modular substation. On-site field installation time can be cut by up to 75 percent versus traditional substation design and installation, and project completion time can be cut in half as pad-mount substation construction, pre-wire assemblage, and testing are all completed in the vendor's facility.

Moving forward, modular substations are poised to have even greater impact for utilities as society continues to rely more on electricity for its economic well-being, security and livelihood.

LAXIWA: THE LARGEST POWER STATION ON THE YELLOW RIVER

By Ruan Quan Rong, Shi Wei, Sang Zhi Qiang, Xi'an Jiaotong University, China,
Eric ZM Ma, Member, IEEE, Melvyn Hopkins, Member IEEE

Laxiwa Hydropower Station is the largest power station in the Yellow River Upper Stream, with total capacity of 4200MW.

Laxiwa Hydropower Station is a major pilot project of China Northwest 750 kV system and a vital power source in the system. For outgoing circuits, a flat spot of 2460m elevation at right bank is designed for an outgoing station. At the 2261m level of the GIS substation, the outgoing lines pass through a horizontal tunnel 50m long and then a 210m vertical shaft to the outgoing station connecting to the grid. For a large power capacity of 4200MW and ultra-high voltage of 750kV, there is no suitable cable available. With experience operating 750 kV in other countries, the design uses 750kV GIL over a total 450m in a single phase.

This article examines the characteristics of Laxiwa Hydropower Project and the 750kV GIL design.

The Laxiwa Hydropower Station will have a total capacity of 4200 MW.

Abstract – Gas Transmission Line (GIL) is a high voltage, high current capacity, long distance power transmission system with more than thirty years operating experience wordwide. GIL bus systems offer low power losses, high reliability, high transmission capacity, minimal maintenance, and long operating life (50 years) while suffering no impact due to change of weather or ambient condition. Although the initial investment is relatively high, GIL is widely used in many countries.

I. INTRODUCTION

GIL is a high voltage and high current capacity coaxial transmission system. The insulating medium is SF6 gas or an SF6 and N2 gas mixture. Both conductor and enclosure utilizes all aluminum structure with a three phase electrical link grounding system. As an insulating medium, compressed gas is used to reduce component dimension for compact civil layout to save space and respective civil engineering.

GIL is similar to GIS bus. In comparison, GIL has certain advantages for long distance and high power transmission applications. GIL adopts simple design and manufacturing since there is no breaking and arcing requirements. Compared to standard GIS bus section lengths of 6 to 8 meters, GIL section lengths can be up to 18m [6] minimizing production and installation costs. Fabricated elbow design of GIL enables changes in direction at any angle, while the cast enclosure design of GIS bus normally makes its turns in ninety degree only. Principally, GIS manufacturers are capable to produce GIL although GIS bus is mainly designed for relatively short GIS inter-connections.

GIL has been in service worldwide since 1970. CGIT Westboro Inc. of USA delivered its first 242kV / 1600A GIL with 414m to Hudson Gen. NJ USA in 1972, a set of GIL with 1200kV / 5000A / 90 and 330m to DOE Waltz Mill, USA in 1981 and 1984 respectively, another set of 800kV / 1200A GIL with 855 and 348m to Edelca Guri Dam of Venezuela in 1984 and 1990. A 199m single phase long GIL with 154kV / 2000A was produced in Japan [1] in 1979. In 1985, Shin Node Substation installed 500kV / 6240A / 152m GIL. In 1988, 275kV / 8000A / 153m GIL was in service in Shin Node Substation of Japan [2]. In 2001 a 500m 420kV, SF6 and N2 mixed gas insulated GIL was used in Geneva Airport project in Switzerland. 500kV GIL has been used in LingAo Nuclear Power Plant [5], Tianshengqiao

750 kV GIL will stretch a total of 450 metres in one phase.

Substation of South China Power JV Corp. and 400kV GIL in Castle Peak Power Plant of China Light & Power Corp in Hong Kong of the People's Republic of China.

The longest GIL applied in a vertical shaft is 305m in height with 242kV / 1200A in Balsam Meadow Pumped Storage Power Station of Southern California, USA [6].

In comparison with overhead lines and cable, GIL has the following characteristics:

- GIL is solid metal structure with standardized manufacturing, high accuracy in machining, high reliability, low failure rate, long operating life of fifty years proven by tests [7];
- GIL has relatively high transmission power capacity of more than 4GW [2];
- Low power losses [7], [8];
- Low capacitive current, suitable for high voltage and ultra-high voltage, long distance power transmission;
- No external electromagnetic fields (EMF);
- No limit in height and no restrain in radius of turns;
- No impact by atmosphere and change of ambient condition which is an advantage for high altitude location;
- Simple and fast installation. No risk on conductor slipping against enclosure resulting in insulation failure;
- Simple terminal connection to either GIS or transformer. No special tools for installation;
- Basically maintenance free;
- As an insulating medium, SF6 gas or SF6 and N2 mixed gas are not flammable, an advantage for fire fighting system design and safety during operation;

II. MAIN TECHNICAL DATA

The preliminary design of GIL is according to IEC 61640 and requirement of Laxiwa Hydropower Station with the following main technical data for GIL selection:

Continued on Page 29

Rated voltage	750	kV
Maximum operating voltage	852	kV
Rated frequency	50	Hz
Rated current	3150	A
Rated short time withstand current,	350	kA
Lightning impulse withstand voltage	1950	kV
Switching surge insulation level	1425	kV
1min Power frequency withstand voltage	960	kV

THE GROWING CASE FOR ONTARIO'S PEAT TO FIRE ITS ELECTRICITY NEEDS

By Bruce Findlay

The lights in Toronto's Queen's Park provincial parliament buildings are still on! But for how long?

Watch out Toronto! Your government continues its steps towards closing the province's coal-fired electrical power plants. Two more years – until 2007 – is all you've got if Premier Dalton McGuinty's cut-off deadline is to be met. Still, there's hope.

Natural gas has been mooted as a substitute. Alberta could provide it readily. That province uses its own coal to fire up its electric power. Its gas would fetch higher dollars if piped east for, transportation aside, Ontario would have to better Chicago buyers of Canadian gas thanks to the North American free trade agreement.

But some Ontarians question the long-term availability of such supplies in any case. So gas prices have tended to be volatile, as, recently, have those of both oil and coal. Now an OPG report claims gas generation would cost more than refurbished nuclear reactors.

PROXIMITY A COST ADVANTAGE

Proximity is a major cost advantage for both Ontario's nuclear and peat power resources. Either bituminous coal from Pennsylvania or lignite (brown coal) from western Canada has 1,500-plus kms to railroad before they fire Ontario furnaces. That adds thousands of dollars to their delivered cost each year. By contrast, Ontario industrial-grade peat from its bogs near Upsala, northwest of Thunder Bay, need be trucked only 35km to the OPG furnaces at Atikokan or Thunder Bay. That adds a mere eight dollars a tonne.

By truck or train to port-side at Thunder Bay, Ontario peat then could be shipped, of course, to other Great Lakes power centres in Canada and/or the U.S.A. Or – a step further – Canadian peat-generated electrical power could be sold directly into the United States.

Preliminary contact – a V-P from a U.S. company – broached this concept some months ago. Nothing has developed since. But he inquired about purchasing the currently isolated, small, underutilized Thunder Bay/Atikokan plants, building a transmission line to link them with neighboring Minnesota, then, using local peat, operating them at full or expanded capacity and providing power to both sides of the border. Interesting; instead of importing U.S. coal, Ontario would be exporting Canadian peat power.

Well, most of the smoky pollution complained about in southern Ontario and also in Michigan, Ohio, Pennsylvania and northern New York state comes, indeed, from U.S. coal, burned either there or (16 million annual tonnes of it) here. Still, it can be overcome.

PEATLANDS NOW UNDER ACTIVE EXPLORATION

As president of Peat Resources Limited (PRL), Toronto, Leon La Prairie has been checking Premier McGuinty's deadline date, carefully. In recent months he has had two Thunder Bay engineering and environmental contractors, and a crew of field specialists, reconfirming the property, product quality and conditions of peatland bogs and marshes in an extensive area centred on Upsala. That apparently was "stage one" of their pre-feasibility studies.

Those lands (186,500 hectares) parallel Trans-Canada Highway 17 and the Canadian Pacific Railway mainline. PRL has rights to work deposits of industrial grade peat fuel there, sufficient to replace the one million tonnes of coal burned by the 250-megawatt power plant at Atikokan. That peat could be trucked just

Continued on Page 30

Continued from Page 27

III. REQUIREMENT OF STRUCTUAL DESIGN

Aluminum is used for conductor and enclosure; insulating medium is compressed gas. According to the layout and installation of the project, the following structural issues need further analysis:

1. Insulating Medium

SF6 gas is widely used in GIL, but may be slightly more expensive. SF6 and N2 mixed gas has been used in some most recent installations and yet it has less operating experience. Laxiwa hydropower project shall consider SF6 and N2 mixed gas as an alternative depending on related technology development.

2. GIL Connection

The conductor connection uses simple plug-in assembly. Conductor sections are joined together using silver plated plug-in contact assembly with ring spring to minimize contact resistance. There are two types of enclosure joints: one is bolted joint design utilizing a double O-ring seal assembly with a leak check port to verify seal integrity. Another one is that GIL bus sections are welded together in the field. A special back-ring is needed during welding to prevent metal particles falling into gas compartments. The advantage of welding is to reduce possible gas leak and to increase reliability during operation, while disadvantages are greater erection work at site with longer installation time and more difficult to control quality as well as not easy to replace section when failure occurs. Bolted flange joint, in comparison, is less erection, shorter installation time, easier to control quality with certain probability of gas leak.

The projects adopting welding commonly use an auto-welding machine with rails to increase quality and efficiency of welding. For the project, welding is increasingly difficult due to the long vertical shaft and additional ventilation system required. Enclosure connection of sections needs further studies.

3. GIL Support

There are two types of GIL support: fixed and sliding.

GIL vertical installation should consider both horizontal and vertical directions, as well as installation procedure.

4. GIL Grounding and Bonding

GIL is cross bonded to minimize external magnetic field and forces. Periodically the GIL is grounded to minimize step and touch potentials.

5. Standard Section

Standard GIL section type and length depends on the manufacturer, transportation, installation and civil layout. Standard section for the project needs further study according to optimized condition set of spare section, manufacturing, transportation, installation, operation and maintenance. The longest possible length of a section, at present, is 18.3m [6].

IV. GIL LAYOUT

The three most common GIL layouts are direct buried underground, outdoor above ground, and underground trenches.

Laxiwa Hydropower project uses trench layout according to overall civil layout and particular field installation requirement and limitations.

According to the Laxiwa Hydropower project civil layout conditions, GIL minimum dimensions, preliminary Laxiwa GIL layout design places two circuits vertically along the wall of horizontal tunnel and one circuit entrenched under the floor of the tunnel. A 12m diameter vertical shaft accommodates three circuits for convenient operation and installation. With experience in other countries, lift, control cable tunnel and ventilation system are designed for

Continued on Page 31

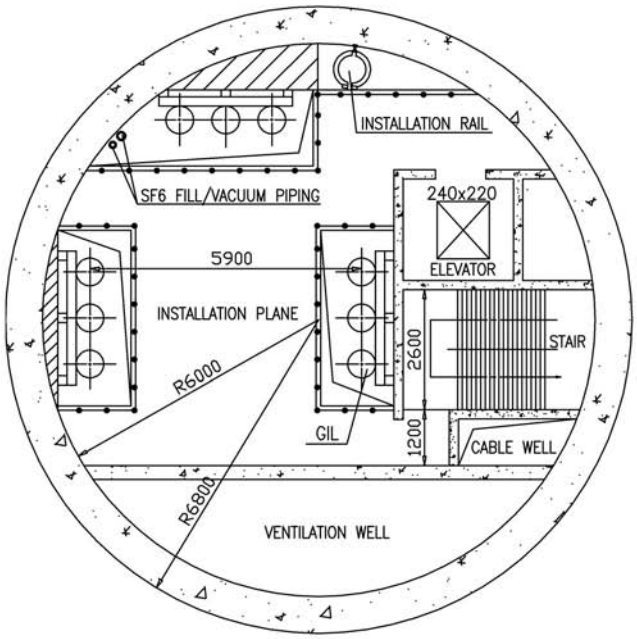

GIL VERTICAL TUNNEL SECTION

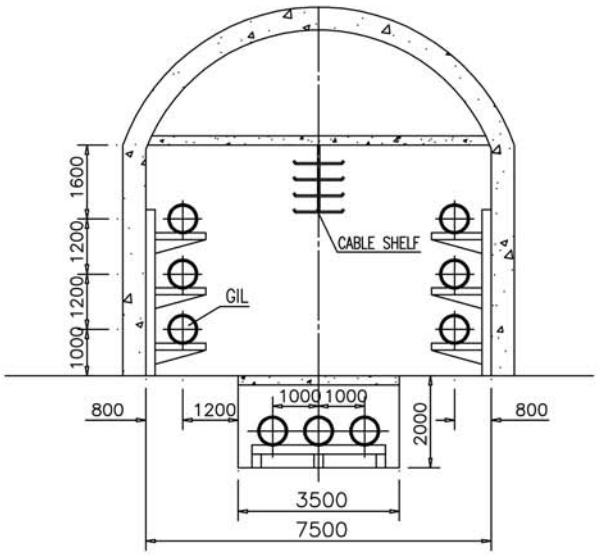

GIL HORIZONTAL TUNNEL SECTION

Drawing 1

Continued from Page 28

35 km to its furnace (or to the Thunder Bay plant, which is closer) at $8 per tonne. Stack effluent and residual waste there, and then, would be virtually denuded of sulphur, mercury and other pollutants.

PRL now has defined 54 individual peatlands varying from 74 hectares to 1,420ha of peat. Thirty of them (18.5 million tonnes) are classed as "indicated"; two (four million tonnes) as "measured" resources. These estimates, they report, would support a one-million tonnes per year peat fuel extraction and processing operation for some 20 years.

The company now is proceeding with "stage two" – environmental surveys, bulk sample testing and engineering studies for extraction equipment selection, dewatering and drying processes, and biomass conversion technologies.

PEAT FUEL PRODUCTION COULD BE UNDER WAY IN 14 MONTHS

A $120 million mining/processing operation there could be producing peat fuel pellets within 18 months for the Atikokan generator – in time to beat the year 2007 deadline, La Prairie has noted. Ancillary plants could be constructed within eight months each to satisfy further demands for the fuel in other OPG units – or in paper mills or smelting operations.

Initially, electricity plant operators likely would fire the peat in a mixture with coal in their existing furnaces. As little as 20 per cent of it would change the character of the fire effectively and critically, La Prairie maintains. Its smoke would be much less noxious; its ash could be sold as fertilizer. Within about 15 years, for relatively minor conversion costs, those OPG plants, progressively, would all be converted to using peat exclusively.

Meanwhile two British firms have signed on with PRL:

VSA Resources expects to raise $10 million from investors in Ireland, Scandinavia and elsewhere in eastern Europe where the values of peat fuel for heat and electricity are widely known and applied. In Finland alone 80 plants burn peat both for power and heat.

Objective Capital Limited has completed a marketing profile of PRL and the unique significance of its peat fuel for Ontario's growing economy.

RESOURCE, INDUSTRY, COMMUNITY DEVELOPMENT

By utilizing its bountiful, hitherto unexploited, peat power resources there, Ontario would be establishing both Upsala and Atikokan as centres also for related industries and commerce – burgeoning counterparts of Alberta's Fort McMurray. As they resonate development, still other sites will give birth to similar progress related to rich pockets of industrial peat that have been identified elsewhere accross the province's north.

Jobs, initially, will employ some 200 on site and upwards of 800 on related and commercial work there and elsewhere in the area. Action at these two locations would be closely monitored at a proposed research centre.

GREAT ECONOMIC POTENTIAL

As the price of coal on the open market has increased sharply this year to as high as $55 a tonne on world markets, and oil to $50 a barrel – so peat fuel becomes dramatically less expensive in caloric cost comparisons with either.

With the world's largest accessible resources of fuel-grade peat lying next door to the markets of North America's industrial Great Lakes basin, Ontario holds a fortune for the taking from peat sales – delivered in granular bulk, in pellets, or in electricity.

American markets might eventually be much larger for Ontario peat than those at home – either directly as fuel or indirectly as peat-generated electricity.

IMPRESSIVE ENVIRO BENEFITS

Replacing coal with peat fuel for thermo-electricity generation reduces sulphur in its smoke by tenfold while virtually eliminating mercury, and other noxious elements. Conversely, removing peat from its bog provides three very positive benefits:

– The boglands correspondingly reduce their natural production of methane (which has 20 times the greenhouse gas negatives of carbon dioxide).

– Reforestation of the boglands absorbs carbon dioxide; and

– The newly reforested growth gives off oxygen.

As a reflection of the above, the Toronto stock market has taken speculative notice: volume of trading has not been large, but PET.H (its TSXVenture symbol) now is positioned in tier two where it has peaked at 85 cents — versus 25 cents in January. ET

Bruce Findlay is with Management Communication Consultants out of Whitby.

Continued from Page 29

the vertical shaft. See drawing 1.

GIL layout directly affects civil engineering, installation and operation, and hence, it needs to further optimize the dimension and layout for the project.

V. CONCLUSION

Laxiwa Hydropower Station is located in a deep valley of high altitude with large generating capacity and ultra-high voltage combination of extreme conditions. A thorough technical and economical comparison for power transmission, the power station is designed as 750kV one step voltage connecting to grid. 750kV GIS is placed underground and 750kV GIL is applied for connection between GIL and the outgoing line station above ground.

GIL bus systems offer high reliability, long operating, high transmission power, low power losses, simple and fast installation, no constrain on height and radius of turns in layout, no significant impact from atmosphere and ambient conditions (particularly important for Laxiwa Hydropower project), as well as safe operation, minimal maintenance, standardized production with mature technology and operating experience in and outside of China. Using GIL for Laxiwa Hydropower Station is technically advanced and feasible, economically reasonable.

And yet, there is still no design and operating experience for 750kV GIL in China. Initial investment is relatively high. Hence further studies and optimization of 750kV GIL need to be carried out for electrical characteristics, major structural layout requirement, installation, transportation, operation and maintenance to guarantee the power station long-term safe and profitable operation.

REFERENCES

[1] Y. Waianae's. Mori etal,"Construction of first Gas insulated transmission line in Japan" IEEE Trans. PAS Vol. PAS-100 NO.10 PP.4319-4329 Oct. 1981

[2] Y. Kuroyanagi, A. Toya et al, "Construction of 8000A class 275kV GAS insulated transmission line in Japan" IEEE Trans. on Power Delivery Vol. 5 NO.1 January 1990

[3] Baer G., Diessner A. et al, "420kV SF6 insulated Tubular bus for the Wehr pumped storage plant, electric tests" IEEE Trans. PAS Vol. PAS-95 No.2 March/April 1976

[4] H. Koch, Thomas Hillers, "Second-generation line" Power Engineering Journal June 2002

[5] Yang Bai Jun, "SF6 CGIT Application in LingAo Nuclear Power Station" Hydropower Electrical Engineering No.1~2 2002

[6] Charles L. Hand, Keith Tieszen, "Gas-Insulated Conductor Used In Unique 1000-ft Vertical Granite Shaft " Transmission & Distribution March 1991

[7] G. Kaul, et al, "Electrical and mechanical Long time behavior of SF6 insulated" Germany

[8] Thomas Hillers, et al, "Gas insulated transmission lines" IEEE Power Engineering Review September 2000

DETAILED AND FOCUSED, THESE PROBLEM-SOLVING handbooks are a must for your electrical library

- Testing and Maintenance Handbook
- UPS/Standby Power Handbook
- Wire and Cable Handbook
- Circuit Breaker and Switchgear Handbook
- Electrical Safety Handbook
- Variable Frequency Drives Handbook
- Programmable Logic Controller Handbook
- Industrial Electricity Efficiency Handbook
- Electrical Transformer Handbook
- Electric Motor Handbook
- Power Quality and Electrical Grounding Handbook
- Electrical Protection and Control Handbook

Regular Price: $35 (Cdn)/$27.50 (US)

Sale Price! $24.50 (Cdn)/$20.50 (US)

Order Now to receive 30% off regular price

Special Offer to save even more...

Electricity Forum Book of the Month Club 50% off regular price.

$199CDN or $169US plus S&H

(905) 686 - 1040

www.electricityforum.com/estore

The Electricity Forum 15 Harwood Ave. South, Suite 204 Ajax Ontario L1S2B9 tel: (905)686-1040 fax: (905)686-1078

ONCE BURNED, TWICE SHY... IF YOU'RE LUCKY!

By John W. Estey, President & CEO, S&C Electric Company

Electrical safety is a very important topic. Every injury is important, as every injury is personal and can interrupt careers or even end lives.

Since my experience is mostly in medium and high voltage and since most facilities folks are more knowledgeable about low voltage, I decided it would be most appropriate if I covered medium voltage.

THE HIERARCHY OF SAFETY

In considering almost any hazardous operation, including medium-voltage electricity, the best place to start is with the hierarchy of safety. The first step in this hierarchy is Engineering Controls, which means trying to do everything practical from an engineering perspective to reduce hazards. The second step involves Administrative and Work Practice Controls, such as the use of warning labels, performance of regular inspections, and documenting the proper steps to take in carrying out each task. The third step is to ensure that operating personnel use appropriate Personal Protective Equipment, or PPE, such as electrically rated footwear, fire-retardant clothing, arc-flash-protection suits, and so on.

Since most readers have systems and equipment already installed and operating — and since it's not practical to re-engineer or replace all of that equipment any time soon — it makes sense to begin our discussion of medium-voltage safety in the middle of the hierarchy with Administrative and Work Practice Controls. We will then go to the beginning of the hierarchy, Engineering Controls, which is an area where there is an opportunity to make a big difference for the future.

ADMINISTRATIVE AND WORK PRACTICE CONTROLS

In discussing Administrative and Work Practice Controls, the NFPA 70E standard, which was written by industry practitioners, forms the basis of OSHA Subpart "S", and places significant responsibilities on the employer for electrical safety, including having a complete electrical safety program. It provides a great place to start in developing your Administrative and Work Practice Controls.

These controls need to deal with the safety of the authorized and the unauthorized, the qualified and the unqualified. As an example of the risks you need to deal with, consider the outdoor medium-voltage switchgear that was making an unusual, loud buzzing sound. A large crowd of unauthorized and unqualified onlookers gathered in front of the equipment, all curious to know what was causing the noise. Imagine the consequences if that gear had suddenly developed an internal arc that blew the doors open, throwing parts and hot gases at the crowd. Or, how about the poor, unqualified maintenance man who was sent in to clean up an electrical room? No one thought to warn him that those porcelain things on top of the medium-voltage switchgear were energized, as were the cables attached to them. Fastidious cleaner that he was, he decided to clean those roof bushings using a vacuum cleaner — with a metal nozzle. And how about the authorized but unqualified maintenance people sent to drill some holes through the wall of an enclosure containing medium-voltage equipment. They were more than surprised when the drill bit broke through the wall, penetrated the insulation on a medium-voltage cable, and vaporized in the ensuring arc. Good thing the enclosure was well grounded!

Even the authorized and qualified are in danger if they take their successful safety records for granted. Over-confidence can and does kill! Consider the utility worker in the desert of California who reached into switchgear to pull out a bracket lying on the floor, saying "not to worry . . . it's so dry here, you can easily get close to energized parts without a problem." In another incident, a utility worker removed the cover from one of two adjacent medium-voltage cabinets and verified that it bore the number of the de-energized circuit on which he was to work. Unfortunately, he did not realize the removable covers had been switched so the cabinet from which he just removed the cover was actually the one that was energized. He went to work without testing or grounding and was killed instantly.

Good administrative systems and work practices can prevent incidents like these. To successfully develop such practices, it is essential to be familiar with medium-voltage systems and equipment and the hazards involved with them. Unfortunately, very few facilities folks have had the opportunity to learn in depth about medium voltage and its risks. For instance, I know of a two-million sq. ft. industrial plant in Illinois that has just one person knowledgeable about the equipment and hazards involved with their extensive medium-voltage system. The knowledge gap is even more chronic in companies where top management has made the mistake of essentially eliminating in-house engineering staffs, thereby removing the on-site expertise that could help prevent injuries and save lives.

MEDIUM-VOLTAGE HAZARDS ARE DIFFERENT

Many of the hazards at medium voltage are different from those at low voltage and, fortunately, work practices can be a huge help in dealing with a number of them. For instance, you must bleed off any static or trapped charge or it will inflict some real harm. You need to be concerned about step potential and equipotential grounding. And, you need to guard against unrecognized sources of medium voltage such as PTs that are backfed from still-energized low-voltage sources. These hazards are why work practices almost always require isolating and grounding medium-voltage circuits before work is done, even though

grounding is used much less frequently on low-voltage equipment. In carrying out this work, it is crucial that the grounding provisions be rated for the system duty, which poses an interesting problem because most grounding equipment isn't rated. When S&C's Field Service people visit sites of power users, they are amazed at what people will use for grounding equipment — everything from automotive jumper cables to bundles of #10 wire that couldn't carry the fault current for even a few cycles.

And, grounding equipment must be used correctly. Consider the plight of the plant maintenance worker asked to work on gear that reportedly has been isolated and grounded. How can that worker be assured that the grounding sets are up to the rating of the system and, even more importantly, that the sets have been installed properly? You'd better be able to answer that question in advance of any work, as you'll certainly be asked to explain it if an accident occurs. Good safety work practices are the cheapest insurance you can have and their preventive powers make them worth the work compared to unpleasant inquires after an accident.

When it comes to operating or maintaining medium-voltage systems, one major problem is that the equipment only needs to be worked on or operated infrequently so it is difficult to maintain currency in the techniques and procedures. To overcome the lack of on-site experience in the operation of this gear, many plants use outside contractors for medium-voltage work. This is certainly a good practice, but it should be understood there's a wide range of experience among contractors claiming to know how to do medium-voltage work. You should scrupulously examine the references and qualifications of any such contractor because hiring a contractor does not relieve you of your responsibility to your employees. NFPA 70E keeps you on the hook, as does common sense.

Both 70E and common sense also require you to work with your people on each and every job. This is even more important than on low-voltage systems because medium-voltage equipment is operated so infrequently. For every task, no matter how mundane, the proper procedures need to be reviewed in depth with the people involved. It is also crucial to ensure that the people are qualified for the task at hand and that they understand the equipment layout and operating features, how to read the one-lines, how to verify open gaps for the specific circuits they'll be working on, how to avoid backfeed, static charge, and so on. Your people should always question what they see, what they think, and what they're doing. As Mark Beutnagel of Texas Instruments said, "The danger is not what you know, but what you think you know that ain't so." As a private pilot, I am regularly reminded that there are bold pilots and there are old pilots but there are no old, bold pilots.

ALLIANCES WITH KEY SUPPLIERS

One of the best ways to help understand the hazards involved with medium-voltage systems and equipment—and to develop the work practices to deal with them — is to develop alliances with the engineering staffs of your key suppliers of such equipment. You will find them knowledgeable and quite happy to share their expertise with you. The knowledge you gain by working with your suppliers in these alliances will not only help you in your medium-voltage work but may help at low voltage too, as many of the safe work practices emerging for low-voltage equipment largely came from experience gained working at medium voltage. This includes arc-flash hazards, safe approach distances, and the use of appropriate PPE

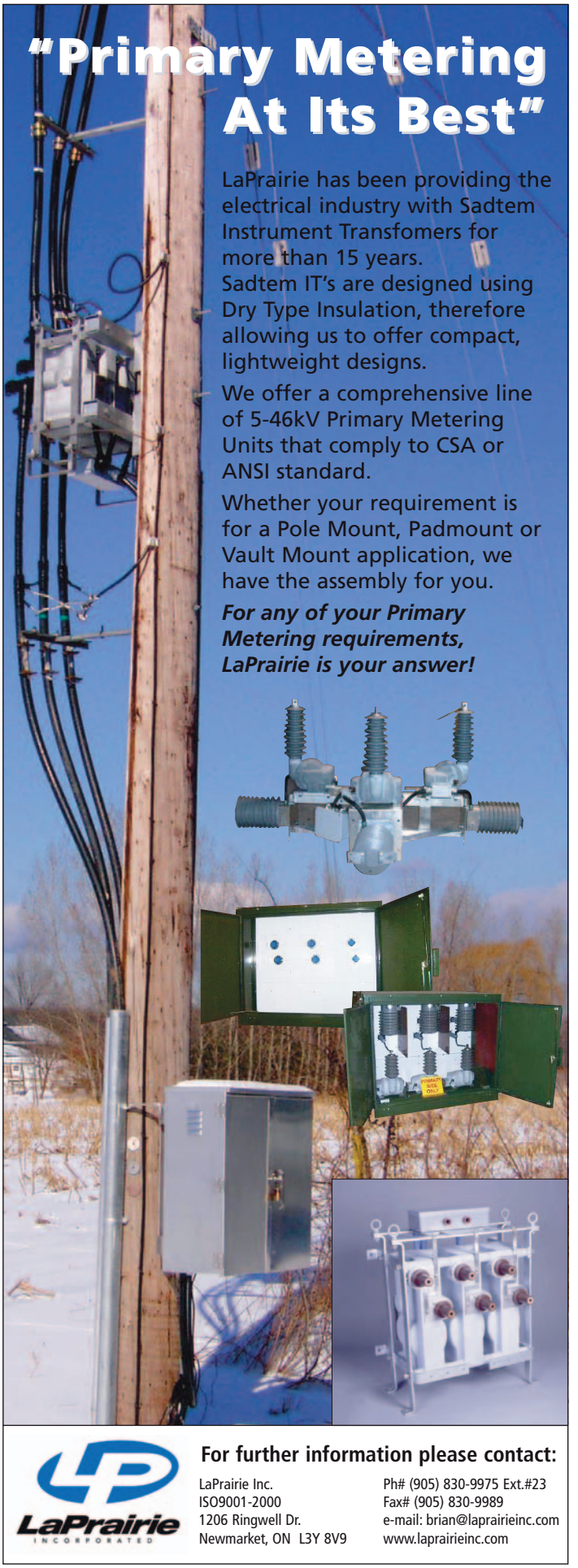

for flash-hazard protection. The Administrative and Work Practice Controls that result from close alliances with your key suppliers can be of significant value in helping your workers avoid the hazards involved in operating medium-voltage systems.

Now, even with all that has been done in terms of work practices and all the requirements of OSHA Subpart "S" and NFPA 70E, there are still too many injuries and deaths associated with operating electrical equipment. You might wonder why. The main answer seems to be that, even with good work practices, people still make mistakes. So we need to continually seek out new and innovative ways to protect against these mistakes. That brings us to the first step of the safety hierarchy, Engineering Controls — the step in which you use engineering to do everything practical to reduce hazards. You can do this through the electrical systems you design and the engineering decisions you make in purchasing equipment. Electrical equipment has, from its very beginning, continued to evolve to be safer and more "idiot-resistant". As a result, there are a great many Engineering Controls you can employ.

As with the design of Administrative and Work Practices, the development of Engineering Controls requires you to have a thorough knowledge of the hazards involved. Again, forming strong alliances with your key suppliers of medium-voltage equipment can help you learn about those hazards and how the equipment can be designed to minimize them. Manufacturers will be happy to work with you because they are hungry for design input from knowledgeable users. This is a classic win-win situation as you and your co-workers will benefit from safer equipment designed to suit your systems, and the manufacturers will benefit from the knowledge of power users like yourselves. Intel, which has an outstanding OSHA incident rate of just .19, holds a design conference with its key suppliers every year at which they talk about safety, quality, and cost.

ENGINEERING CONTROLS HELP

Fortunately, many medium-voltage hazards can be dealt with through Engineering Controls. At medium voltage, you don't need to actually touch the conductors to be shocked as was so tragically learned by the utility lineman in the desert, who thought he could get close without harm because it was so dry there. To reduce such mistakes, gear can be designed to minimize exposure and access to medium voltage. And, medium-voltage arcs inside a piece of equipment are much more violent and difficult to control than most facilities folks can imagine. To understand the phenomenon, let's look at the damage wrought by an arc inside a relatively typical piece of medium-voltage switchgear. This system is rated 15 kV and the fault current is 40,000 amperes. You will see a rack in front of the gear holding cotton patches that simulate the clothing worn by an operator. The operation will be shown at normal speed and then in slow motion (the still photos shown here are taken from a video).

As you can see, the door came open with such force, it actually bent around the frame in front of the gear and the hot gases blew right through the opening in the front. Most facilities engineers are astounded when they see the extraordinary violence of an open arc like this inside medium-voltage equipment. Fortunately, you can use newer technologies as part of your Engineering Controls to deal with internal arcs. There is a new class of switchgear called "arc-resistant" that is designed to handle this kind of internal fault. I confess I have never liked the term "arc-resistant" because most uninitiated people conclude that it is resistant to the initiation of arcs. Unfortunately, that is not true. It's sort of like the term "life insurance" — if only it did what its name implies!

ARC-RESISTANT—A NEW CLASS OF SWITCHGEAR

Gear called "arc-resistant" is actually designed so that the doors stay closed and the hot gases are vented away when arcs occur inside the gear with the doors closed. There are a couple of standards that define how to test the gear to demonstrate these capabilities. Among other things, to pass these tests, arc-resistant gear needs doors that remain closed and do not let any parts fly outside of the equipment when internal arcs occur. Further, any gases that do escape must not ignite cotton patches placed about 4 inches away from the gear around any openings up to about 6.6 feet above the ground. By meeting these standards, the gear should isolate people from exposure to the arc. Such gear can be designed in a myriad of ways, but most manufacturers vent the hot gases up and away from the operator. Let's look at a video of a successful operation of arc-resistant switchgear that uses this technique. You will see that the internal arc is still violent and extremely difficult to handle. But, the gear keeps the door closed and the cotton patches are not burned. In this video, the gases are vented upward but, for purposes of the test, are not ducted away — as they would be in an actual installation. As a result, more smoke and arcing is visible than would normally be the case.

As another example of how medium-voltage switchgear can be built safer, technologies exist today that can completely isolate operators from exposure to medium voltage during switching, fault interruption, voltage testing, grounding, phasing, and most other normal operations — while still providing a full view of the open gaps. Such gear can also be made "arc-resistant" and can further reduce worker exposure through automation for remote control.

Unfortunately, facilities folks have been exceedingly slow in adopting arc-resistant gear and gear using these new technologies that can help enhance worker safety. Why, you might ask, has adoption been so slow? Well, at the risk of proving that Ben Franklin was right when he said he "never knew a man who was good at making excuses who was good at anything else," let me give you some explanations people have offered. One often-cited reason for this slow adoption is that people don't have time to

work on anything new. Indeed, with all the downsizing that's gone on around the industry the last several years, many feel a little like Malcolm Forbes who said, "Unless you're serving time, there's never enough of it". However, when dealing with the safety and lives of people, time pressures can never be an excuse for failing to keep up with safety technology.

THE RISKS ARE NOT WELL KNOWN

In many cases, adoption is slow because the risks are neither well known nor well understood. The surprise that engineers typically express when they see the incredible power of an arc inside equipment is a perfect example. It is imperative that an employer become familiar with the hazards to which workers can be exposed if he/she plans to protect them properly.

Some say they don't need these kinds of enhancements because they haven't had workers hurt in that way. I sincerely hope these folks don't drive around without wearing seatbelts just because they've not yet been in a head-on collision. In industry, we shouldn't need to experience a problem before we take steps to prevent it, because doing so means we'll be too late to do the injured or deceased any good. It is a sad commentary on business today that it often takes ten signatures to buy something but only one to fix it. And, when accidents occur because preventive measures have been slow to be adopted, we will prove Robert Half was correct when he said, "The search for someone to blame will always be successful."

People also say they are hesitant to adopt these safety measures because of the cost. For instance, arc-resistant gear typically costs about 10 to 20% more than regular gear. I've often wondered how many cars would have airbags if this were an extra-cost option, and how many people would be injured or killed in cars for which the buyer paid a little less.

YOU NEED TO JUDGE THE DEGREE OF RISK

As in all things, engineers are expected to assess the degree of risk posed by various hazards and the costs involved in avoiding them. I like the ancient Roman tradition that made it clear to engineers they must accept responsibility for their work. When the scaffolding was removed from a completed Roman arch, the law read that the engineer who built the arch had to stand beneath it. If the arch came crashing down, he'd be the first to know. As a result, the Roman engineer knew that the quality of his work would have a direct, personal impact on his life. That's why it's not surprising to find so many Roman arches have survived through the ages. We also live with the systems we design and the equipment we purchase.

In exercising your judgment, you wouldn't, for instance, buy arc-resistant gear if your system could muster only a few thousand amps of medium-voltage fault current. However, it would be a real shame for those with high available fault currents to not buy such gear because they have not yet experienced an internal arcing event. Or, because the equipment costs a little more. Or, even worse, because they lack a full understanding of the hazard posed to their people by internal arcs. The pressure on us to make these decisions wisely is gaining importance as OSHA's Safety Related Work Practices and NFPA 70E require employers to protect employees from more and more hazards.

IEEE STANDARDS

One other important contribution you can make — not just to the safety of your coworkers but to people throughout the industry — is to work on writing and updating industry standards. The IEEE Power Engineering Society has the task of writing the standards for many components you use, including switchgear, transformers, surge arresters, power system relays, and so on. Unfortunately, PES is not too well populated with practicing engineers from industrial, commercial, institutional, and government facilities. As a result, these industry standards often suffer from insufficient participation by power users like you. This work can certainly benefit from your help and I can assure you that it would be thoroughly appreciated.

As we all continue to work on safety, sometimes the greatest danger is not that our aim is too high and we miss it . . . but rather that our aim is too low and we reach it. By attending this workshop, you've shown that you are not aiming too low. I hope that my remarks have helped in some way to advance one of this conference's missions, which is to stimulate innovation in overcoming barriers. And, I hope that we can all help achieve the second conference mission, which is to accelerate the application of breakthrough improvements in human factors, technology, and managing systems that reduce the risk of electrical injuries. Thank you very much for your kind attention.

John W. Estey, President & CEO, S&C Electric Company, delivered this as part of a keynote address at a recent IEEE IAS Electrical Safety Workshop

THE ELECTRICITY FORUM

June 6-7, 2005 • Vancouver, BC
Executive Airport Plaza Hotel

June 8-9, 2005 • Edmonton, AB
The Coast Terrace Inn

June 13-14, 2005 • Saskatoon, SK
Saskatoon Inn

June 15-16, 2005 • Winnipeg, MB
Victoria Inn

June 20-21, 2005 • Toronto, ON
Park Plaza Hotel

Exciting New Forums Coming this Fall:

Power Transformer Management

Electrical Safety In The Workplace

Fire Alarm Systems: Practical Applications

Industrial Electricity Efficiency

Electrical Grounding For Industrial Power Systems

2005 NETA Electrical Maintenance: Standards and Practices

AC Drives Application and Maintenance Forum

This two-day forum presents the very latest information in the world of low voltage, medium-voltage and high-voltage AC Drive technology. Students will have the opportunity to learn the latest efficiency issues related to the installation of drives in industrial motor systems. Issues with motor feeder cables and motors when applied to VFD systems will also be discussed, along with how to realize improvements in operating efficiencies. Special applications and strategies to address the reduction of components required in a drive system, cost reductions, size reductions and reliability will be discussed.
It is an excellent opportunity for delegates to ask specific questions and exchange ideas with our forum leaders.

• bonus

- An Electricity Forum Coupon (Value $100) to be used against any future 2005 Electricity Forum event (restrictions apply)
- 1.4 CEU credits issued by the Engineering Institute of Canada
- Variable Frequency Drives Handbook
- A FREE subscription to Electricity Today Magazine
- Forum Presentations in Paper Format
- CD-ROM Containing Presentations
- Register Three, Get One FREE

For detailed information visit our web site at www.electricityforum.com/forums/drives2005.html

early bird registration fee $549.00 + 38.43 GST (8days prior the course date)

HELP YOUR COMPANY GENERATE PROFITS by being well trained and informed

The Electricity Forum Training Institute (EFTI) is one of Canada's Leading providers of continuing education to electrical personnel. For the past 19 years, The Canadian Electricity Forum has been offering courses to electrical engineering, maintenance construction and technical services personnel. In that time, more than 20,000 delegates have attended our training. The EFTI has assembled a faculty of instructors with real-world experience in their respective areas of expertise, as well as extensive experience in presenting courses/seminars in Canada and around the world. We conduct on-site training for all of the electrical subjects offered in our public venues. In addition, we publish Electricity Today Magazine, Electrical Source Magazine, and 12 Annual Technical Handbooks.

Continuing Education Units (CEUs) Offered for the courses

Successful completion of this course qualifies delegates to receive a certificate of course completion with indicated CEUs. CEUs are granted by the Engineering Institute of Canada. One CEU is equivalent to 10 professional development hours of instruction.

• registration fees

The registration fee to attend the course is $599.00 + 41.93 GST. Register and prepay 8 days prior to the course date and receive an early bird registration fee of $549.00 + 38.43 GST per delegate. Companies registering 3 delegates at the regular price ($599.00) will receive a 4th registration **FREE**. The fee includes forum participation, a forum materials package, refreshments and luncheons on both days. (GST #R105219976)

• hotel reservations

A special bedroom rate (non-commissionable) has been arranged with each hotel. To receive this rate, inform the hotel that you are a forum delegate when making reservations.

Park Plaza Hotel
33 Carlson Court [near the airport], Toronto, ON
Tel: 416-675-1234

Victoria Inn
1808 Wellington Ave, Winnipeg, MB
Tel: 877-842-4667

Saskatoon Inn Hotel and Conference Centre
2002 Airport Drive, Saskatoon, SK
Tel: 800-667-8789

The Coast Terrace Inn
4440 Gateway Blvd., Edmonton, AB
Tel: 888-837-7223

Park Plaza Hotel
33 Carlson Court [near the airport], Toronto, ON
Tel: 416-675-1234

• air flight information

We have appointed Air Canada as the official airline of our 2005 forums. Simply contact Air Canada's North America toll-free number at 1-800-361-7585 or locally at 514-393-9494 or your travel agent and take advantage of the Special Discounted Airfares. Our convention number is CV053569.

• cancellation and refund policy

Registration fees are refundable only upon receipt of written notification 10 days prior to the conference date, less a 10 per cent service charge. Substitution of participants is permissible.
The Canadian Electricity Forum reserves the right to cancel any conference it deems necessary and will, in such event, make a full refund of the registration fees.

4 easy ways to register

phone: 1-905-686-1040
fax: 1-905-686-1078
online: **www.electricityforum.com/forums/reg.htm**
mail: The Electricity Forum 15 Harwood Ave. S., Suite 204 Ajax, ON L1S 2B9

SAFETY GUIDELINES FOR HIGH VOLTAGE AND/OR LINE POWERED EQUIPMENT

By Samuel M. Goldwasser

Introduction

Consumer electronic equipment such as TVs, computer monitors, microwave ovens, and electronic flash units, use voltages at power levels that are potentially lethal. Even more so for industrial equipment like lasers and anything else that is either connected to the power line, or uses or generates high voltage.

Normally, these devices are safely enclosed to prevent accidental contact. However, when troubleshooting, testing, making adjustments, and during repair procedures, the cabinet will likely be open and/or safety interlocks may be defeated. Home-built or modified equipment, despite all warnings and recommendations to the contrary - could exist in this state for extended periods of time - or indefinitely.

Depending on overall conditions and your general state of health, there is a wide variation of voltage, current, and total energy levels that can kill.

Microwave ovens in particular are probably THE most dangerous household appliance to service. There is high voltage - up to 5,000 V or more - at high current - more than an amp may be available momentarily. This is an instantly lethal combination.

TVs and monitors may have up to 35 kV on the CRT but the current is low - a couple of milliamps. However, the CRT capacitance can hold a painful charge for a long time. In addition, portions of the circuitry of TVs and monitors as well as all other devices that plug into the wall socket are line connected. This is actually more dangerous than the high voltage due to the greater current available - and a few hundred volts can make you just as dead as 35 kV!

Electronic flash units and strobe lights, and pulsed lasers have large energy storage capacitors which alone can deliver a lethal charge - long after the power has been removed. This applies to some extent even to those little disposable pocket cameras with flash which look so innocent being powered from a single 1.5 V AA battery. Don't be fooled - they are designed without any bleeder so the flash can be ready for use without draining the battery!

Even some portions of apparently harmless devices like VCRs and CD players - or vacuum cleaners and toasters - can be hazardous (though the live parts may be insulated or protected - but don't count on it!)

This information also applies when working on other high voltage or line connected devices like Tesla Coils, Jacobs Ladders, plasma spheres, gigawatt lasers, hot and cold fusion generators, cyclotrons and other particle accelerators, as well as other popular hobby type projects.

In addition, read the relevant sections of the document for your particular equipment for additional electrical safety considerations as well as non-electrical hazards like microwave radiation or laser light. Only the most common types of equipment are discussed in the safety guidelines, below.

Safety Guidelines

These guidelines are to protect you from potentially deadly electrical shock hazards as well as the equipment from accidental damage.

Note that the danger to you is not only in your body providing a conducting path, particularly through your heart. Any involuntary muscle contractions caused by a shock, while perhaps harmless in themselves, may cause collateral damage. There are likely to be many sharp edges and points inside from various things like stamped sheet metal shields and and the cut ends of component leads on the solder side of printed wiring boards in this type of equipment. In addition, the reflex may result in contact with other electrically live parts and further unfortunate consequences.

The purpose of this set of guidelines is not to frighten you but rather to make you aware of the appropriate precautions. Repair of TVs, monitors, microwave ovens, and other consumer and industrial equipment can be both rewarding and economical. Just be sure that it is also safe!

• Don't work alone - in the event of an emergency, another person's presence may be essential.

• Always keep one hand in your pocket when anywhere around a powered line-connected or high voltage system.

• Wear rubber bottom shoes or sneakers. An insulated floor is better than metal or bare concrete but this may be outside of your control. A rubber mat should be an acceptable substitute but a carpet, not matter how thick, may not be a particularly good insulator.

• Wear eye protection - large plastic lensed eyeglasses or safety goggles.

• Don't wear any jewelry or other articles that could accidentally contact circuitry and conduct current, or get caught in moving parts.

• Set up your work area away from possible grounds that you may accidentally contact.

• Have a fire extinguisher rated for electrical fires readily accessible in a location that won't get blocked should something burst into flames.

• Use a dust mask when cleaning inside electronic equipment and appliances, particularly TVs, monitors, vacuum cleaners, and other dust collectors.

• Know your equipment: TVs and monitors may use parts of the metal chassis as ground return yet the chassis may be electrically live with respect to the earth ground of the AC line. Microwave ovens use the chassis as ground return for the high voltage. In addition, do not assume that the chassis is a suitable ground for your test equipment!

• If circuit boards need to be removed from their mountings, put insulating material between the boards and anything they may short to. Hold them in place with string or electrical tape. Prop them up with insulation sticks - plastic or wood.

Continued on Page 39

THOUSANDS OF MAKES AND MODELS FROM MORE THAN 100 MANUFACTURERS

RENT LEASE PURCHASE

www.test-equipment-rental.com

a division of Technical Diagnostic Services, Inc.

order today
YOUR FREE CATALOG

CALL 817/465-9494

Technical Diagnostic Services, Inc.
4300 Beltway Place, Suite 120
Arlington, Texas 76018

ON-LINE
www.test-equipment-rental.com/catalog.html

Guidelines

Continued from Page 37

• If you need to probe, solder, or otherwise touch circuits with power off, discharge (across) large power supply filter capacitors with a 2 W or greater resistor of 100 to 500 ohms/V approximate value (e.g., for a 200 V capacitor, use a 20K to 100K ohm resistor). Monitor while discharging and/or verify that there is no residual charge with a suitable voltmeter. In a TV or monitor, if you are removing the high voltage connection to the CRT (to replace the flyback transformer for example) first discharge the CRT contact (under the insulating cup at the end of the fat red wire). Use a 1M to 10M ohm 1W or greater wattage resistor on the end of an insulating stick or the probe of a high voltage meter. Discharge to the metal frame which is connected to the outside of the CRT.

• For TVs and monitors in particular, there is the additional danger of CRT implosion - take care not to bang the CRT envelope with your tools. An implosion will scatter shards of glass at high velocity in every direction. There is several tons of force attempting to crush the typical CRT. Always wear eye protection. While the actual chance of a violent implosion is relatively small, why take chances? (However, breaking the relatively fragile neck off the CRT WILL be embarrassing at the very least.)

Connect/disconnect any test leads with the equipment unpowered and unplugged. Use clip leads or solder temporary wires to reach cramped locations or difficult to access locations.

If you must probe live, put electrical tape over all but the last 1/16" of the test probes to avoid the possibility of an accidental short which could cause damage to various components. Clip the reference end of the meter or scope to the appropriate ground return so that you need to only probe with one hand.

Perform as many tests as possible with power off and the equipment unplugged. For example, the semiconductors in the power supply section of a TV or monitor can be tested for short circuits with an ohmmeter.

Use an isolation transformer if there is any chance of contacting line connected circuits. A Variac(tm) (variable autotransformer) is not an isolation transformer! However, the combination of a Variac and isolation transformer maintains the safety benefits and is a very versatile device.

The use of a GFCI (Ground Fault Circuit Interrupter) protected outlet is a good idea but may not protect you from shock from many points in a line connected TV or monitor, or the high voltage side of a microwave oven, for example. (Note however, that, a GFCI may nuisance trip at power-on or at other random times due to leakage paths (like your scope probe ground) or the highly capacitive or inductive input characteristics of line powered equipment.) A GFCI is also a relatively complex active device which may not be designed for repeated tripping - you are depending on some action to be taken (and bad things happen if it doesn't!) - unlike the passive nature of an isolation transformer. A fuse or circuit breaker is too slow and insensitive to provide any protection for you or, in many cases, your equipment. However, these devices may save your scope probe ground wire should you accidentally connect it to a live chassis.

When handling static sensitive components, an anti-static wrist strap is recommended. However, it should be constructed of high resistance materials with a high resistance path between you and the chassis (greater than 100K ohms). Never use metallic conductors as you would then become an excellent path to ground for line current or risk amputating your hand at the wrist when you accidentally contacted that 1000 A welder supply!

Don't attempt repair work when you are tired. Not only will you be more careless, but your primary diagnostic tool - deductive reasoning - will not be operating at full capacity.

Finally, never assume anything without checking it out for yourself! Don't take shortcuts!

Safety Tests for Leakage Current on Repaired Equipment

It is always essential to test AFTER any repairs to assure that no accessible parts of the equipment have inadvertently been shorted to a Hot wire or live point in the power supply. In addition to incorrect rewiring, this could result from a faulty part, solder splash, or kinked wire insulation.

There are two sets of tests:

DC leakage: Use a multimeter on the highest OHMS range to measure the resistance between the Hot/Neutral prongs of the wall plug (shorted together and with the power switch on where one exists) to ALL exposed metal parts of the equipment including metallic trim, knobs, connector shells and shields, VHF and UHF antenna connections, etc.

This resistance must not be less than 1 M ohm.

AC leakage: Connect a 1.5K ohm, 10 Watt resistor in parallel with a 0.15 uF, 150 V capacitor to act as a load. Attach this combination between the probes of your multimeter. With the equipment powered up, check between a known earth ground and each exposed metal part of the equipment as above.

WARNING: Take care not to touch anything until you have confirmed that the leakage is acceptable - you could have a shocking experience!

The potential measured for any exposed metal surface must not exceed 0.75 V. This corresponds to a maximum leakage current of 0.5 mA.

Note: A true RMS reading multimeter should be used for this test, especially where the equipment uses a switchmode power supply which may result in very non-sinusoidal leakage current.

If the equipment fails either of these tests, the fault MUST be found and corrected before putting it back to service.

Checking for correct hookup of the Hot, Neutral, and Ground wires to the AC plug should also be standard procedure. There's no telling how it may have been scrambled during a previous attempt at repair by someone who didn't know any better or by accident. Unlike logic circuits, black is NOT the standard color for ground in electric wiring! ET

Sam Goldwasser received a B.S. degree from Drexel University, Philadelphia, PA, in 1974, and the M.S. and Ph.D. degrees from the Massachusetts Institute of Technology (MIT), Cambridge, MA, in 1979, all in electrical engineering. He is currently on the research faculty at the Center for Microwave-Lightwave Engineering, Electrical and Computer Engineering Department, Drexel University.

For more articles and technical information on the latest in safety regulations and applications, look for our new Safety Handbook Volume 1 at our website, www.electricityforum.com

Go with the Flow

2005

IEEE PES

TRANSMISSION and DISTRIBUTION

Conference & Exposition

ERNEST N. MORIAL CONVENTION CENTER

NEW ORLEANS

OCTOBER 9 THRU 14

www.ieeet-d.org

JOIN THE PARADE OF TECHNOLOGY

As more and more electrical power flows through our country and around the world, the more you need to be a part of the largest technical conference and manufacturers exposition in the T and D industry.

Visit our website for reserving a booth, Call for Papers, Conference Registration, special events, and more.

IEEE

POWER ENGINEERING SOCIETY PES IEEE

THERMOGRAPHY AND ULTRASOUND PARTNER TO DETECT ELECTRICAL ANOMALIES FROM OUTSIDE THE BOX

By Jon Chynoweth

Incipient failures in plant equipment almost always produce heat and sound outside the range of human senses. Thus, infrared thermography and ultrasound detection are ideal for finding early symptoms of valve leaks, loose electrical connections, electrical overloads, leaking furnaces, low or excess lubrication, arcing, tracking, corona, etc., before catastrophic problems develop.

Thermography is passive thermal imaging, i.e., creating a picture based on thermal profiles. Ultrasound detection equipment allows the user to hear sounds in frequency ranges normally inaudible to the human ear. In essence, IR thermography sees what we can't see; ultrasound hears what we can't hear and two senses are better than one for proactive maintenance monitoring.

One of the most important applications of these technologies is inspection of electrical panels. Ultrasound can safely scan around door seals and air vents to listen for anomalies. Arcing, tracking and corona – typically not detectable with infrared – all have identifiable high frequency sounds associated with them.

New technology for thermal imaging and ultrasound scanning of electrical panels through a closed door reduces labor and the amount of personal protective gear needed. It also eliminates the need to have an electrician on hand.

Infrared scanning, on the other hand, normally requires that the panel be open. Doing this safely involves a host of precautions to protect personnel from electrocution, arc flash and other hazards. Preferably, an arc flash assessment per NFPA 70E has been made to determine the level of personal protective equipment (PPE) that must be worn, and whether barricading is necessary to restrict fork truck traffic or passersby. PPE can be extremely hot and cumbersome in a 70°F room, much less a hot industrial plant, limiting the time a thermographer can work and causing

Continued on Page 42

Spyglass

Continued from Page 41

potentially dangerous distraction from safe practice.

Obviously, there are advantages to being able to do IR scans with electrical panels closed. This encourages more frequent inspections, because minimal PPE is required, there's no time and effort spent opening/closing cabinets, no skilled electrician needs to be on hand, and barricading is unnecessary.

The solution typically has been to mount an IR transparent window (or sight glass) in the cabinet (glass and Plexiglas are IR opaque in the desired wavelength range). Sight glasses have a number of drawbacks. The crystalline materials are expensive, extremely fragile, and can be obscured by dust/dirt. Commonly used materials are subject to degradation from moisture and corrosive fumes, too. They pass only a percentage of the IR radiation, thus adding an unknown level of attenuation to instrument readings. Multiple ports (costing $200-300 each) are usually required, because the camera has a very limited field of view through them, and viewing objects closer than 12" to the port may be a problem because of the minimum focus distance of standard camera optics.

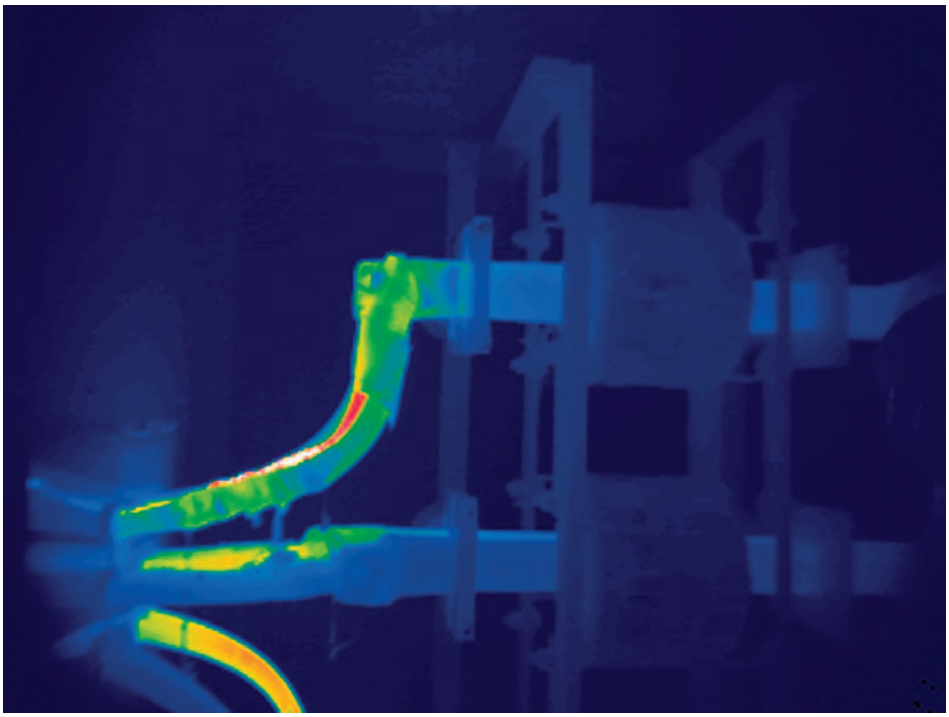

A typical infrared image taken through the Viewport.

A new alternative for closed-door panel inspections requires no IR transparent window and improves inspections with ultrasound probes. The Viewport is the first UL-approved device to allow closed-door infrared inspections of electrical panels. Matched with a SpyGlass™ fisheye lens, it allows an inspector to scan a panel by looking through a single port's tiny 0.62" opening. (The cone-shaped tip of the lens barrel "docks" in the port's socket-shaped opening.) The port is UL-approved (number NITW2.E228318 in the U.S. and NITW8.E228318 in Canada) for installation on NEMA type 1, 2, 3, 3R, 4, 5, 12,12K and 13 enclosures, maintaining all ratings and approvals for the cabinet as made by the OEM.

The port also facilitates ultrasound inspections and results in improved readings. The socket shape of the port perfectly matches the tip of widely used ultrasound probes, giving them an unobstructed opening to listen through. ET

Jon Chynoweth has been involved in the development and marketing of thermal imaging cameras and related software for 20 years. He has been instrumental in the development of smaller, higher-resolution thermal cameras, as well as technology for safer inspections of high-voltage electrical panels and remote substation monitoring for utilities.

EnergyINet

Continued from Page 16

subdivision. The behaviour of the consumer takes time to shift, but it does work.

"Smart metering has been out there for a while industrially. I remember one very vocal person from the Lethbridge Ironworkers when smart metering was introduced, and he decided to move to a night shift so he could buy electricity for several cents less during off-peak hours. Now it is a savings to him, and peak demand has been reduced for everyone."

And to help meet Canada's peak demand needs, finding ways to integrate smaller sources of generation (fuel cell, microturbines, wind, solar and variable output) will fall under the microscope of EnergyINet.

"How do you integrate these systems?" asks Mr. Taylor. "Managing the grid with these variable input sources will be the challenge. We can take a look at Denmark and their strong grid ties to Germany, and see how that model can relate to Canada and the United States. The grid is very much driven by demand, and it is something that we are only now beginning to address."

The strong North American link is sometimes overlooked or underestimated, Mr. Taylor points out.

"Canada is the largest oil supplier to the United States, superceding even Saudi Arabia. And I learned at a recent conference that we supply eight to nine bcf (billion cubic feet) of natural gas to the U.S., with one billion cubic feet of that being passed along to Mexico."

From a federal perspective, EnergyINet is an integral component in shaping Canada's future energy needs.

"We clearly share common objectives and interests in energy development in Canada," says John Efford, Minister of Natural Resources Canada.

"EnergyINet is a great starting place on how we might bring together our resources and expertise to initiate new research and demonstration projects."

For more information on EnergyINet, you can visit their website at www.energyinet.com. ET

SEPTEMBER 27th-29th 2005 Louisville, Kentucky USA

The Demo Expo

ICUEE

INTERNATIONAL CONSTRUCTION & UTILITY EQUIPMENT EXPOSITION

AT ICUEE

OPERATE
RUN
TOUCH
GRIP
FEEL
HANDLE
CARESS
EXPERIENCE
STROKE
FEEL
TRY ON
DEMO

THE LATEST CONSTRUCTION AND UTILITY EQUIPMENT!

ICUEE, The Demo Expo, is the exposition for demonstrations of construction and utility equipment. At ICUEE **you can operate the equipment yourself** and explore the newest products and innovations in the industry. The broad spectrum of **equipment you will run** is the ultimate in competitive comparisons.

Ranked as the second largest tradeshow of any industry in the U.S. ICUEE, The Demo Expo, has the most equipment manufacturers and service providers in the following industries:

- Electric
- Sewer/Water
- General Construction
- Phone/Cable
- Gas
- Government
- Landscaping

At ICUEE, The Demo Expo, you can run it!

Register at... www.icuee.com

FLEX-CORE
Current Transformers, Transducer & Accessories

Catalog 2011-170 page catalog featuring split-core and solid-core current transformers, potential transformers, electrical transducers for AC and DC applications, signal conditioners, analog and digital panel and switchboard meters, current relays/switches, shunts, shunt switches, shorting terminal blocks, multi-function power meters and accessories.

For more information contact:
Flex-Core
6625 McVey Blvd
Columbus, OH 43235
Tel: (614) 889-6152
Fax: (614) 876-8538
Email: flexcore@msn.com
www.flex-core.com

CABLE MASTER INC.
3M/AEMC/HDW Regional Distributor

We specialize in Training and Sales of a full range of 3M/HDW/AEMC equipment

- 3M Dynatel Cable/Pipe/Fault Locators
- 3M EMS and Programmable Markers/Locators
- 3M Confined Space Monitors
- HDW Fault Locating Equipment and TDRs.
- New, Demo or refurbished units
- Lightweight, compact and rugged
- ISO 9002 Registered
- We have 35+ years experience
- Complete line of AEMC instruments
- Hi-Pot testing 0-80kv DC
- Fault locate all types of cables

For Sales/Training/Contract Locates:
Toll Free: 877-715-7303
Tel: (416) 804-8799
Fax: (905) 715-7305
Email: cablemaster@rogers.com
Web: www.cablemasterinc.com

FOR SALE

SURPLUS USED BUNDLED CONDUCTOR BLOCKS

- Manufacturer: Campbell Specialty Company
- Catalog # S1028-PB
- Sheave Diameter - 28"
- Conductor Capacity without or with Liners - 3"
- Bottom of Groove Diameter - 24"
- Working Load Pounds - 12,500
- Ultimate Strength - 40,000
- Weight Pounds - 340
- Quantity - Approx. 100

NOTE: These blocks have sheaves with parapolic style grooves that are wide and may be used for reconductoring or regular stringing.

CONTACT:
Tim Felasco
Phone: (315) 460-2947
Fax: (315) 457-4325
Cell: (315) 952-3801
E-Mail: rtimothy.felasco@us.ngrid.com

National Grid
INVESTMENT RECOVERY & RECYCLING SEVICES DEPT.

MPHusky is the only manufacturer of CSA certified Cabl-Bus.

MPHusky Cabl-Bus is safe, reliable and efficient
- Suitable for both indoor & outdoor use
- Low cost and labour saving

Field-proven for over 30 years

MPHUSKY

Primary Power with MPHusky can offer a complete terminal-to-terminal turn-key installation for any type of cable bus application from 600V to 69kV.

Primary Power Designs Inc are sole representatives for MPHusky Cabl-Bus systems in Ontario & Manitoba

205 Mackenzie Avenue
Unit 1 Ajax, Ont. L1S 2G1
Tel: (905) 426-8912
Fax: (905)426-6016
Email: ppts@on.aibn.com

Primary Power Designs Inc

primarypowergroup.com/cablebus.html

AC DRIVES APPLICATION AND MAINTENANCE FORUM

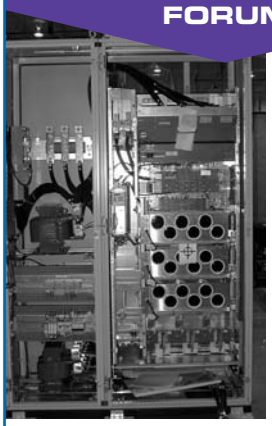

June 6-7, 2005
VANCOUVER, BC

June 8-9, 2005
EDMONTON, AB

June 13-14, 2005
SASKATOON, SK

June 15-16, 2005
WINNIPEG, MB

June 20-21, 2005
TORONTO, ON

This two-day forum presents the very latest information in the world of low voltage, medium-voltage and high-voltage AC Drive technology. Students will have the opportunity to learn the latest efficiency issues related to the installation of drives in industrial motor systems.
It is an excellent opportunity for delegates to ask specific questions and exchange ideas with our forum leaders.

THE COURSE IS PRESENTED BY THE ELECTRICITY FORUM

To register for the forum
call **905-686-1040**
or visit: https://www.securewebexchange.com/electricityforum.com/reg.shtml

PURE METAL GALVANIZING
Canada's Largest Custom Hot Dip Galvanizer and a Leader in Providing Cost-effective Corrosion Protection

From huge switchgear components to small castings and hardware, every part of an article is fully protected with the total immersion zinc 'Hot Dip' Galvanizing process.

ISO 9002 REGISTERED

Pure Metal Galvanizing has three conveniently located facilities in Southern Ontario to meet a variety of zinc galvanizing needs — including centrifuging and 'pickle and oil' processes.

For detailed information regarding procedures and specifications:
Toll free: 800-263-8737
Fax: 416-675-7698
Email: bneczkar@puremetal.com
www.puremetal.com

Current Transformer Test System

High performance at low cost. Model CT-4000 is easy to use and super fast. Just connect your CT and enter the burden value. RCF and phase data will appear like magic. Stored programs test CT's to accuracy limits.

Special Features:

- high accuracy & repeatability
- easy to use, high speed
- high power, to 8000A
- auto ranging
- prints RCF and phase data
- data vs burden plotting
- programmable current source
- sold state low distorsion

"The world's best systems"
Call for literature or demonstration

OPTIMIZED DEVICES, INC.
220 Marble Ave. Pleasantville, New York 10570
Phone: 914 760 6100 Fax: 914 769 6102
Email: sales@optdev.com

G.T. WOOD
Hands on Power

G.T. WOOD COMPANY LIMITED
High Voltage Electrical Contractor

- High Voltage Preventative Maintenance
- Transformer and Switchgear Repair
- Infra Red Thermography Inspections
- Engineering Design Studies
- Substation Design and Build
- Harmonic Analysis/Power Factor Correction
- Cable Locates and Repairs
- Sales of New and Pre-owned Equipment
- Supply of Temporary Substations
- PCB Management

24 HOUR EMERGENCY SERVICE
For additional information contact:
Toll free:1-800-305-2036
Tel: (905) 272-1696
Fax: (905) 272-1425
Email:sales@gtwood.com
www.gtwood.com

Hubbell Power Systems is proud to partner with Grafton West, Grafton Utility Supply and Harris & Roome.

For more information contact:
Hubbell Canada LP
Tel: 905-839-1138
Fax: 905-831-6353
Email: InfoHPS@Hubbellonline.com
Or visit our website
http://www.hubbellpowersystems.ca

LIZCO SALES
ELECTRICAL POWER EQUIPMENT SPECIALISTS

WE HAVE THE ENERGY

CANADA's largest on-site inventory

- New/New Surplus/Rebuilt: Oilfilled/Dry Transformers
- New Oilfilled "TLO" Substations
- New S&C Fuses/Loadbreaks
- High and Low Voltage
  - Vacuum/Gas Breakers
  - Air Circuit Breakers
  - Molded Case Breakers
  - QMQB/Fusible Switches
  - HV Towers
  - Combination Starters
- Emergency Service
- Replacement Systems
- Design/Build Custom Systems

1-877-842-9021
www.lizcosales.com

FOR SALE

National Grid
INVESTMENT RECOVERY & RECYCLING SEVICES DEPT.

New SURPLUS WIRE AND CABLE FOR SALE

Approx. 15,000 feet of 1000 MCM, 35kV Copper EPR Insulated Wire by Kerite.
(30 rolls located @ Gloucester & Molder Service Centers in Massachusetts.)

CONTACT: Michael Stanistreet
Phone: (315) 460-2949
Fax: (315) 457-4325
Cell: (315) 243-5966
E-mail: michael.stanistreet@us.ngrid.com

FLIR SYSTEMS HawkIR Sight Glass Infrared Windows

FLIR Systems Ltd. offers a complete line of HawkIR Sight Glass Infrared Windows for High and Medium Voltage applications. The Infrared Sightglass is ULC approved for retrofit on enclosures. The IP65 viewing window allows for safe and quick infrared scanning on indoor an outdoor MCC's and Electrical cabinets.The gasketed Sightglass lens comes in sizes 1" to 4" and provides safety locks.

For further details contact
FLIR Systems Ltd.
1-800-613-0507 X30
IRCanada@flir.com

For information on
Canadian 2004 Infrared Training Center courses visit:
www.infraredtraining.com

ADVERTISER	PAGE	CONTACT INFO	ELECTRICITYFORUM WEB PAGE
Absopulse	35	www.absopulse.com	
AGO	9	www.arcfr.net	
Bell	7	www.businessonthego.ca/utilities	
Cable Master Inc.	44	www.cablemasterinc.com	www.electricityforum.com/products/cablemas.htm
Canadian Electricity Forum	36	www.electricityforum.com	www.electricityforum.com
Dupont	11	www.dupont.ca	www.electricityforum.com/products/dupont.htm
ETI	25	www.etimotors.com	
Flex-Core	44	www.flex-core.com	www.electricityforum.com/products/flex.htm
FLIR Systems Ltd.	19, 48, 45	www.flir.com	www.electricityforum.com/products/flir.htm
GT Wood Company Ltd.	45	www.gtwood.com	www.electricityforum.com/products/gtwood.htm
Hubbell Power Systems	2, 17, 45	infoHPS@Hubbellonline.com	www.electricityforum.com/products/hubbell.htm
ICUEE	43	www.icuee.com	
IEEE/PES T&D	40	www.ieeet-d.org	
Laprairie	33	www.laprairieinc.com	www.electricityforum.com/products/laprairie.htm
Lineal	24, 44	www.lineal.com	
Lizco Sales	45	www.lizcosales.com	www.electricityforum.com/products/lizco.htm
Magna Electric Corp.	15	www.magnaelectric.com	www.electricityforum.com/products/magna.htm
Morgan Schaffer	47	www.morganschaffer.com	www.electricityforum.com/products/morgan.htm
MTE Corporation	16	www.mtecorp.com	www.electricityforum.com/products/mte.htm
National Grid	44, 45	(email: rtimothy.felasco@us.ngrid.com *and* michael.stanistreet@us.ngrid.com)	
Optimized Devices	45	www.optder.com	www.electricityforum.com/products/optimized_devices.htm
Primary Power	44	www.primarypowergroup.com	www.electricityforum.com/products/priimary.htm
Pure Metal Galvanizing	44	www.puremetal.com	
Salisbury	13	www.whsalisbury.com	www.electricityforum.com/products/whsalis.htm
Synergy	21	www.synergyinc.com	www.electricityforum.com/products/SYNERGY_ENERGY_INC.html
Technical Diagnostic Systems (TDS)	38	www.technicaldiagnostic.com	www.electricityforum.com/products/tds.htm
Terex	5	www.terexutilities.com	www.electricityforum.com/products/Terex_Utilities.html

Transformer problems?

This is where your Calisto should have been.

Don't be left picking up the pieces. Catastrophic transformer failures can easily be prevented with the Calisto on-line, dissolved hydrogen and water monitor.

Calisto monitors hydrogen production and detects transformer faults at their earliest stages thereby reducing the number of unforeseen outages and preventing catastrophic failures.

- Designed to withstand the harshest environments
- Precise monitor readings are as reliable as lab results
- Increases the life expectancy of your transformer by monitoring the moisture content in the transformer oil
- Download specifications and software at www.morganschaffer.com

Calisto prevents catastrophic failures – one transformer at a time.

MORGAN SCHAFFER SYSTEMS

Transformers - The Inside View

5110 de Courtrai Avenue
Montreal, Quebec
Canada H3W 1A7

Tel.: +514.739.1967
Fax: +514.739.0434
E-mail: sales@morganschaffer.com

VISIT OUR WEBSITE AT: www.morganschaffer.com

Go infrared...

without going in the red!

New High Resolution ThermaCAM® EX320

Filter capacitors scanned and avoided an estimated $500,000 outage.

Facility transformer captured, $200,000 cost averted.

ThermaCAM® EX320

ThermaCAM® E25

Plant Engineering PRODUCT of the YEAR WINNER

ThermaCAM® E25 $12,995 CDN

The NEW ThermaCAM® EX320 provides the same superior resolution as professional infrared cameras costing $50,000 or more with zoom and professional measurement tools and report capabilities. The ThermaCAM® E25 is the most affordable and feature-rich thermography camera in the world.

CONTACT FLIR SYSTEMS FOR A FREE DEMO.

FLIR SYSTEMS™

The Global Leader in Infrared Cameras

Servicing Canada for 45 years

1 800 613 0507

www.flir.ca